920-18 FEED MIXER

OPERATION AND PARTS MANUAL

ROTO-MIX
P.O. Box 1724
2205 E. Wyatt Earp Blvd.
Dodge City, Kansas 67801
(620) 225-1142
© ROTO-MIX LLC 2020

Table of Contents

SERIAL NUMBER _____

441912 9/2026

Printed in U.S.A.

This Page Intentionally Left Blank

TABLE OF CONTENTS

DESCRIPTION **PAGE NO.**

WARRANTY 4

SCALES WARRANTY & SERVICE POLICY 5

OPERATOR QUALIFICATIONS 6

SAFETY INFORMATION.....7-20

CHAIN TENSIONING & LOADING INSTRUCTIONS 21-22

LUBRICATION.....23

PLANETARY GEARBOX & HYDROSTAT 24

SPECIFICATIONS 25

TOP AUGER DRIVE SERVICE 26

920-18 TRUCK DIMENSIONS 27

920-18 TRUCK MOUNTING DIMENSIONS 28

920-18 TRAILER DIMENSIONS 29

920-18 STATIONARY DIMENSIONS 30

REPAIR PARTS TABLE OF CONTENTS.....33

Revision Date	Changes
9/2026	Correct driveline part number, page 70

2205 East Wyatt Earp Blvd * Dodge City, Kansas 67801 * Phone: 620-225-1142 * Fax: 620-225-6370 * www.rotomix.com

Limited Warranty Statement

ROTO-MIX LLC warrants to the original purchaser all products manufactured by it to be free from defects in material and workmanship under normal use and service.
ROTO-MIX's obligation under this warranty is limited to repairing or replacing, as the company may elect, free of charge and without charge for installation, at the place of business of a dealer or distributor authorized to handle the equipment covered by this warranty or at a ROTO-MIX facility, any parts that prove, in the company's judgment, to be defective in material or workmanship within one (1) year after delivery to the original purchaser, and still owned by the original purchaser. This warranty shall in no way make ROTO-MIX liable to anyone for personal injuries or damages, loss of time, or expense of any kind either direct or indirect resulting from part failure or defect. This warranty is subject to acts of God, fire and existing conditions of supply and demand, or production, or ability or inability to deliver, or for any other valid reason beyond the reasonable control of ROTO-MIX, to obtain materials, manufactured replacement parts, or make delivery thereof. No distributor, dealer, agent, or ROTO-MIX employee (other than the CEO or President in writing) is authorized to extend any other or further express or implied warranty or incur any additional obligation on ROTO-MIX's behalf in connection with the sale of this product.

If ROTO–MIX, or its duly authorized representative, shall find that such returned part or parts are defective and such defects, or defect, are included in and covered by said warranty, then such defective part or parts shall promptly be replaced without charge to the purchaser, F.O.B. the ROTO–MIX plant.

Product Registration - It is a condition of this warranty that the original purchaser must fill out the warranty card furnished by ROTO-MIX and that it be returned to ROTO-MIX within 10 days of purchase and be recorded in ROTO-MIX's owner file for this warranty to be valid. In the event an owner's card is not on file at the ROTO-MIX office, the warranty period will extend only from date equipment was picked up or shipped from the ROTO-MIX plant.

Maintenance - It is the customer's responsibility to maintain their equipment in accordance with the instructions provided in the Operator's Manual. ROTO-MIX recommends that you keep records and receipts; you may be asked to prove that maintenance instructions have been followed.

Operation – It is the customer's responsibility to operate the equipment only for the purpose for which it was designed and in accordance with all safety and operational recommendations contained in the Operators Manual. If a defect in materials or workmanship occurs, it is the customer's responsibility to cease operating the equipment until authorized repairs are made**. Damage, which occurs from continued operation, may not be covered by this warranty.**

What this Warranty Covers
This warranty covers failures caused by defects in materials or workmanship only.

This Warranty does not cover failures caused by:

- Improper operation
- Natural calamities
- Unauthorized modifications
- Unauthorized repairs
- Use of Non ROTO-MIX parts
- Neglected maintenance
- The use of PTO Shaft Adaptors
- Usage contrary to the intended purpose of the product

Limited Warranty Statement continued

This Warranty does not cover replacement of Wear or Maintenance Items including, but not limited to.

- Lubricants
- Filters
- Hoses
- Tires
- Augers
- Wipers
- Chains
- Idlers
- Batteries
- Blades
- Belts

This Warranty does not cover:

- Pickup and delivery of the equipment
- Service Calls or Travel Time to and from sites
- Rental of replacement equipment during repair period
- Products that have been declared a total loss and subsequently salvaged
- Overtime labor charges
- ROTO-MIX is not responsible and will not be liable for damage caused to persons or property, commercial loss, loss of time or production, loss of use by reason of the installation or use of ROTO-MIX products or their mechanical failure.

Right to Make Changes

ROTO-MIX reserves the right to make any changes to a ROTO-MIX product at any time without incurring any obligation with respect to any product previously ordered, sold or shipped, with or without notice.

Parts Warranty

ROTO-MIX warranties replacement parts against defects in materials or workmanship for a period of 90 days or the remainder of the product warranty, whichever is longer. Remedy for defective replacement parts for units that are beyond the original product warranty, will be limited to replacement of the failed part. Failures that are due to damage, improper installation, lack of maintenance or improper operation will not be covered.

ROTO-MIX 2205 East Wyatt Earp Blvd., Dodge City, KS 67801 (620) 225-1142 Fax: (620) 225-6370

SCALES WARRANTY & SERVICE POLICY

DIGI-STAR SCALE SYSTEMS

Digi-Star, LLC warrants for a period of one year from date of installation, to correct by repair or replacement, at Digi-Star's option, any defect in material or workmanship in any part of this product. In the event of replacement, Digi-Star's sole obligation shall be to provide replacement products or parts. F.O.B. Digi-Star, LLC, W5527 Hwy 106, Fort Atkinson, WI 53538 USA.

WEIGH-TRONIX SCALE SYSTEMS

WEIGH-TRONIX warrants for a period of one year from date of installation, to correct by repair or replacement, at Weigh-Tronix's option, any defect in material or workmanship in any part of this product. In the event of replacement, Weigh-Tronix's sole obligation shall be to provide replacement products or parts. F.O.B. Avery Weigh-Tronix, 1000 Armstrong Drive, Fairmont, MN 56031-1439 USA.

OPERATOR QUALIFICATIONS

Operation Of this mixer/feeder shall be limited to competent and experienced persons. In addition, anyone who will operate or work around a mixer/feeder must use good common sense. In order to be qualified, he or she must also know and meet all other qualifications, such as:

1. Some regulations specify that no one under the age of sixteen (16) may operate power machinery. It is your responsibility to know what these regulations are in your area and/or situation.

2. Current OSHA regulations state in part: At the time of initial assignment and at least annually thereafter, the employer shall instruct **EVERY** employee in the safe operation and servicing of all equipment with which the employee is, or will be involved.

3. Unqualified persons are to **STAY OUT OF THE WORK AREA.**

4. A person who has not read and understood all operating and safety instructions is not qualified to operate the machinery.

FAILURE TO READ THIS MIXER/FEEDER MANUAL AND ITS SAFETY INSTRUCTIONS IS A MISUSE OF THE EQUIPMENT.

SAFETY

TAKE NOTE! THIS SAFETY ALERT SYMBOL FOUND THROUGHOUT THIS MANUAL IS USED TO CALL YOUR ATTENTION TO INSTRUCTIONS INVOLVING YOUR PERSONAL SAFETY AND THE SAFETY OF OTHERS. FAILURE TO FOLLOW THESE INSTRUCTIONS CAN RESULT IN INJURY OR DEATH.

THIS SYMBOL MEANS

-ATTENTION!

-BECOME ALERT!

-YOUR SAFETY IS INVOLVED!

SIGNAL WORDS: Note the use of the signal words DANGER, WARNING, and CAUTION with the safety messages. The appropriate signal word for each has been selected using the following guidelines:

DANGER: Indicates an imminently hazardous situation that, if not avoided, will result in serious injury or death. This signal word is to be limited to the most extreme situations typically for machine components which, for functional purposes, cannot be guarded.

WARNING: Indicates a potentially hazardous situation that, if not avoided, will result in serious injury or death, and includes hazards that are exposed when guards are removed. It may also be used to alert against unsafe practices.

CAUTION: Indicates a potentially hazardous situation that, if not avoided, may result in minor or moderate injury. It may also be used to alert against unsafe practices.

If you have questions not answered in this manual or require additional copies or the manual is damaged, please contact your dealer or ROTO-MIX, 2205 E. Wyatt Earp, Dodge City, Kansas, 67801. (Telephone) 620-225-1142 (Fax) 620-225-6370

SAFETY FIRST

REMEMBER: The careful operator is the best operator. Most accidents are caused by human error. Certain precautions must be observed to prevent the possibility of injury or death.

DO NOT ALLOW PERSONNEL OTHER THAN THE QUALIFIED OPERATOR NEAR THE MACHINE.

NEVER START MACHINE UNTIL ALL GUARDS AND SAFETY SHIELDS ARE IN PLACE.

DO NOT CLEAN, ADJUST OR LUBRICATE THE MACHINE WHILE IT IS IN MOTION.

BEFORE STARTING TRACTOR ENGINE, BE SURE PTO SHIELDS TURN FREELY.

LOOSE OR FLOPPY CLOTHING SHOULD NOT BE WORN BY THE OPERATOR.

OPERATING PRECAUTIONS & INSTRUCTIONS:

A. Check to see that no obstructions are present in the mixer prior to start up.

B. Before loading, run the mixer empty and check all operations.

C. Do not overload the mixer, as the mixing efficiency may be reduced and unit damage may occur. (See loading instructions).

D. Remove all moisture drain plugs if the mixer is going to set in the rain or snow.

E. Be sure all shields are in place before operation.

F. Use common sense when operating.

SAFETY
READ BEFORE YOU FEED

EQUIPMENT SAFETY GUIDELINES

Safety of the operator is one of the main concerns in designing and developing a new piece of equipment. Designers and manufactures build in as many safety features as possible. However, every year many accidents occur which could have been avoided by a few seconds of thought and a more careful approach to handling equipment. You, the operator, can avoid many accidents by observing the following precautions in this section. To avoid personal injury, study the following precautions and insist those working with you, or for you, follow them.

In order to provide a better view, certain photographs or illustrations in this manual may show an assembly with a safety shield removed. However, equipment should never be operated in this condition. Keep all shields in place. If shield removal becomes necessary for repairs, replace the shield prior to use.

Replace any CAUTION, WARNING, DANGER or instruction safety decal that is not readable or is missing. Location of such decals are indicated in this manual.

Do not attempt to operate this equipment under the influence of drugs or alcohol.

Review the safety instructions with all users annually.

This equipment is dangerous to children and persons unfamiliar with its operation. The operator should be a responsible adult familiar with farm machinery and trained in this equipment's operations. Do not allow persons to operate or assemble this unit until they have read this manual and have developed a thorough understanding of the safety precautions and of how it works.

To prevent injury or death, use a tractor equipped with a Roll Over Protective System (ROPS). Do not paint over, remove or deface any safety signs or warning decals on your equipment. Observe all safety signs and practice the instructions on them.

Never exceed the limits of a piece of machinery, in its ability to do a job, or to do so safely, if in question - **DON'T TRY IT.**

LIGHTING AND MARKING

t is the responsibility of the customer to know the lighting and marking requirements of the local highway authorities and to install and maintain the equipment to provide compliance with the regulations. Add extra lights when transporting at night or during periods of limited visibility.

KEEP ALL SHIELDS IN PLACE

Do not operate mixer/feeder without safety shields in place.

Rotating parts can crush or dismember causing personal injury or death.

Disconnect PTO driveline before removing shields for adjustment or service.

OPERATE MIXER/FEEDER SAFELY

Rotating parts can entangle or strike people, resulting in personal injury or death.

Never enter a mixer/feeder while in operation.

Operate the mixer/feeder from the operator's seat only.

Do not exceed load capacity of the mixer/feeder. (See loading instructions).

Reduce speed when turning or traveling on rough terrain.

Avoid traveling over loose fill, rocks, ditches or holes.

Keep transmissions in gear when traveling downhill.

KEEP RIDERS OFF MIXER/FEEDER

Keep riders off.

Riders are subject to injury such as being struck by foreign objects and being thrown off. Riders also obstruct the operator's view resulting in the machine being operated in an unsafe manner.

SAFETY
READ BEFORE YOU FEED

STAY CLEAR OF ROTATING DRIVELINES

Entanglement in rotating driveline can cause serious injury or death.

Keep tractor master shield and driveline shields in place at all times. Make sure rotating shields turn freely.

Wear close fitting clothing. Stop the engine and be sure PTO driveline is stopped before making adjustments, connections, or cleaning out PTO driven equipment .

PREVENT BATTERY EXPLOSIONS

Keep sparks, lighted matches, and open flame away from the top of battery. Battery gas can explode.

Never check battery charge by placing a metal object across the posts. Use a volt-meter or hydrometer.

Do not charge a frozen battery; it may explode. Warm battery to 60F (16C) before charging.

AVOID HIGH-PRESSURE FLUIDS

Escaping fluid under pressure can penetrate the skin causing serious injury or death.

Avoid the hazard relieving pressure before disconnecting hydraulic or other lines. Tighten all connections before applying pressure.

Search for leaks with a piece of cardboard. Protect hands and body from high pressure fluids.

If an accident occurs, see a doctor immediately. Any fluid injected into the skin must be surgically removed within a few hours or gangrene may result. Doctors unfamiliar with this type of injury should reference a knowledgeable medical source.

SAFETY SIGNS

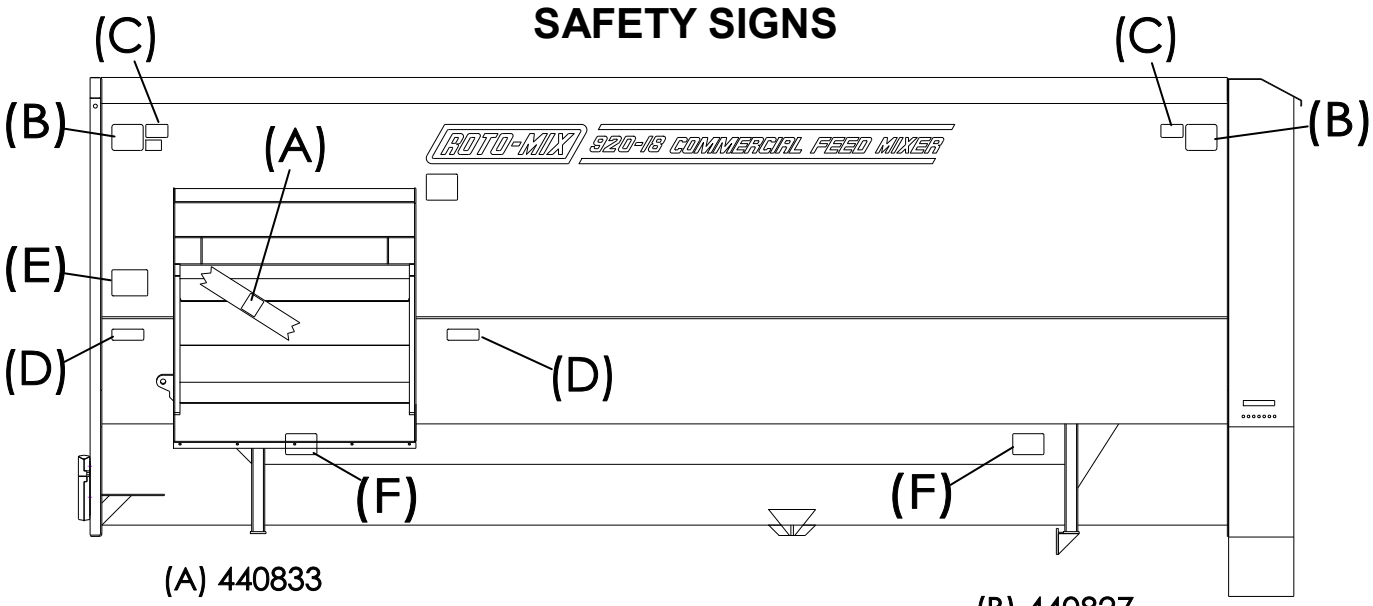

(A) 440833

(B) 440827

(C) 440831

(D) 440818

(E) 440819

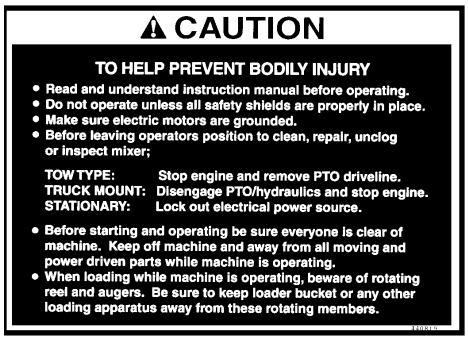

(F) 440826

SAFETY SIGNS

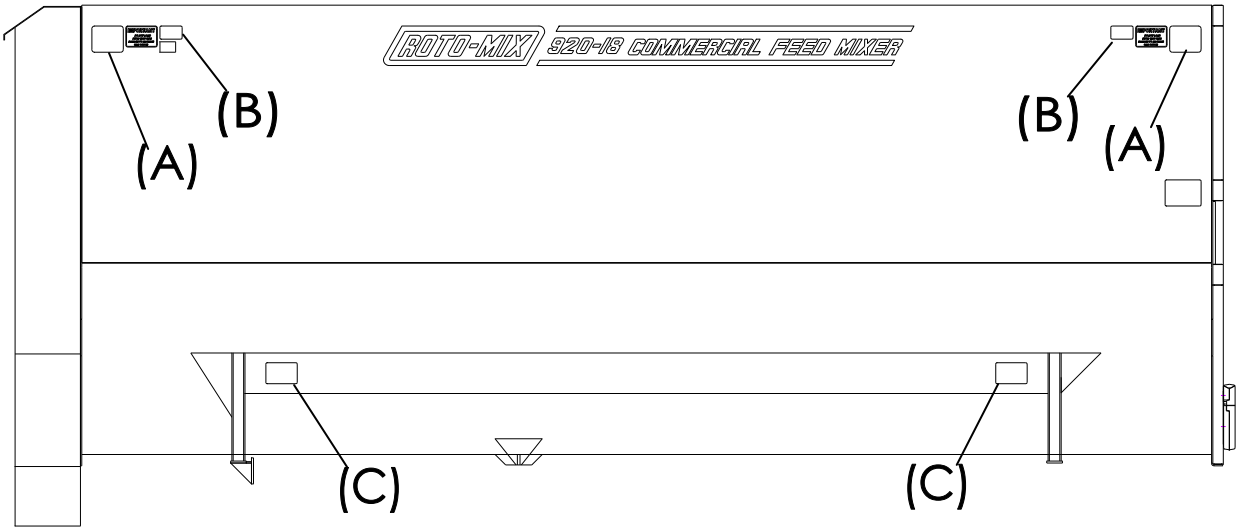

(B) 440831

(A) 440828

(C) 440826

SAFETY SIGNS

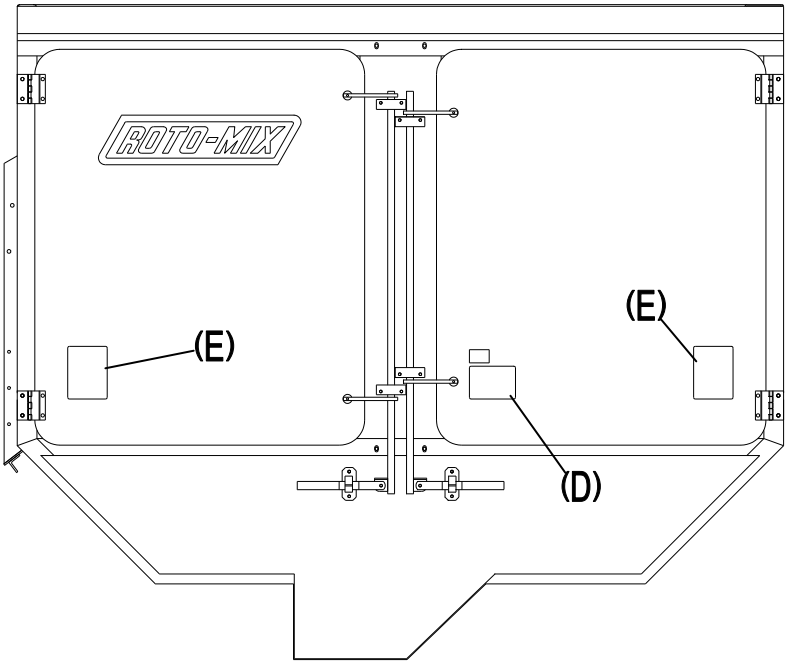

(E) 440822

(D) 440819

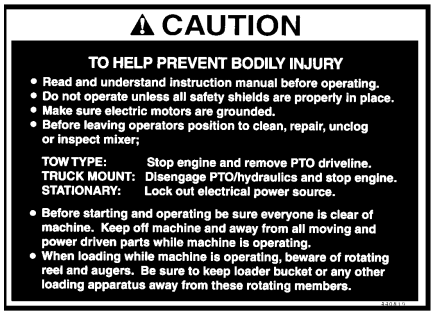

780741 - 920-18 DECAL KIT
780741-S - 920-18 DECAL KIT (SERVICE)

SAFETY DECAL CARE

Keep safety decals and signs clean and legible at all times.

Replace safety decals and signs that are missing or have become illegible.

Replaced parts that displayed a safety sign should also display the current sign.

Safety decals or signs are available from your dealer or the ROTO-MIX manufacturing plant.

How to Install Safety Decals:

Be sure that the installation area is clean and dry.

Decide on the exact position before you remove the backing paper.

Remove the smallest portion of the split backing paper.

Align the decal over the specified area and carefully press the small portion with the exposed sticky backing in place.

Slowly peel back the remaining paper and carefully smooth the remaining portion of the decal in place.

Small air pockets can be pierced with a pin and smoothed out using the piece of decal backing paper.

PRACTICE FIRE PREVENTION

Keep fire extinguishers accessible at all times. Use the extinguisher recommended for the material being processed. It should be rated safe for use on electrical fires.

Never smoke close to combustible material.

Clean the area before welding or other activities which may make sparks.

Keep all components that generate excessive heat clear of oil and other combustible materials.

SAFETY
READ BEFORE YOU FEED

REMEMBER

Your best assurance against accidents is a careful and responsible operator. If there is any portion of this manual or function you do not understand, contact your dealer or the ROTO-MIX plant.

BEFORE OPERATION:

Carefully study and understand this manual.

Do not wear loose-fitting clothing which may catch in moving parts.

Always wear protective clothing and substantial shoes.

Keep wheel lug nuts or bolts tightened to specified torque.

Assure that agricultural implement tires are inflated evenly.

Give the unit a visual inspection for any loose bolts, worn parts or cracked welds, and make necessary repairs. Follow the maintenance safety instructions included in this manual.

Be sure that there are no tools lying on or in the mixer/feeder.

Do not use the unit until you are sure that the area is clear, especially children and animals.

Because it is possible that this mixer/feeder may be used in dry areas or the presence of combustibles, special precautions should be taken to prevent fires and fire fighting equipment should be readily available.

Don’t hurry the learning process or take the unit for granted. Ease into it and become familiar with your new mixer/feeder.

Practice operation of your mixer/feeder and its attachments. Completely familiarize yourself and other operators with its operation before using.

Securely attach to towing unit. Use a high strength, appropriately sized hitch pin with a mechanical retainer.

Do not allow anyone to stand between the tongue or hitch and the towing vehicle when backing up to the mixer/feeder.

SAFETY
READ BEFORE YOU FEED

DURING OPERATION:

Beware of bystanders, **particularly children!** Always look around to make sure that it is safe to start the engine of the towing vehicle or move the unit. This is particularly important with higher noise levels and quiet cabs, as you may not hear people shouting.

NO PASSENGERS ALLOWED - Do not carry passengers anywhere on, or in, the tractor or equipment, except as required for operation.

Keep hands and clothing clear of moving parts.

Do not clean, lubricate or adjust your mixer/feeder while it is moving.

Be especially observant of the operating area and terrain - watch for holes, rocks or other hidden hazards. Always inspect the area prior to operation.

Do not operate near the edge of drop-offs or banks.

Do not operate on steep slopes as overturn may result.

Operate up and down (not across) intermediate slopes. Avoid sudden starts and stops.

Pick the levelest possible route when transporting across fields. Avoid the edges of ditches or gullies and steep hillsides.

Be extra careful when working on inclines.

Periodically clear the equipment of brush, twigs or other materials to prevent buildup of dry combustible materials.

Maneuver the tractor or towing vehicle at safe speeds.

Avoid overhead wires or other obstacles. Contact with overhead lines could cause serious injury or death.

Avoid loose fill, rocks and holes; they can be dangerous for equipment operation or movement. Allow for unit length when making turns.

Do not walk or work under raised components or attachments unless securely positioned and blocked.

Keep all bystanders, pets and livestock clear of the work area.

Operate the towing vehicle from the operator’s seat only.

Never stand alongside of the unit with engine running. Never attempt to start engine and/or operate machine while standing alongside of unit.

DURING OPERATION (CONT.)
Never leave running mixer/feeder unattended.

As a precaution, always recheck the hardware on mixer/feeder following every 100 hours of operation. Correct all problems. Follow the maintenance safety procedures.

FOLLOWING OPERATION:

Following operation, or when unhitching, stop the tractor or towing vehicle, set the brakes, disengage the PTO and all power drives, shut off the engine and remove the ignition keys.

Store the unit in an area away from human activity.

Do not park equipment where it will be exposed to livestock for long periods of time. Damage and livestock injury could result.

Do not permit children to play on or around the stored unit.

Make sure parked machine is on a hard, level surface and engage all safety devices.
Wheel chocks may be needed to prevent unit from rolling.

HIGHWAY AND TRANSPORT OPERATIONS:

Adopt safe driving practices:

Keep the brake pedals latched together at all times. **Never use independent braking with machine in tow as loss of control and/or upset of unit can result.**

Always drive at a safe speed relative to local conditions and ensure that your speed is low enough for an emergency stop to be safe and secure. Keep speed to a minimum.

Reduce speed prior to turns to avoid the risk of overturning.

Avoid sudden uphill turns on steep slopes.

Always keep the tractor or towing vehicle in gear to provide engine braking when going downhill. Do not coast.

Do not drink and drive.

HIGHWAY AND TRANSPORT OPERATIONS (CONT.):

Comply with state and local laws governing highway safety and movement of farm machinery on public roads.

Use approved accessory lighting flags and necessary warning devices to protect operators of other vehicles on the highway during daylight and nighttime transport.

The use of flashing amber lights is acceptable in most localities. However, some localities prohibit their use. Local laws should be checked for all highway lighting and marking requirements.

When driving the tractor and mixer/feeder on the road or highway under 20 MPH (40 KPH) at night or during the day, use flashing amber warning lights and a slow moving vehicle (SMV) identification emblem.

Plan your route to avoid heavy traffic.

Be a safe courteous driver. Always yield to oncoming traffic in all situations, including narrow bridges, intersections, etc.

Be observant of bridge loading ratings. Do not cross bridges rated lower than he gross weight at which you are operating.

Watch for obstructions overhead and to the side while transporting.

Always operate mixer/feeder in a position to provide maximum visibility at all times. Make allowances for increased length and weight of the mixer/feeder when making turns, stopping the unit, etc.

PERFORMING MAINTENANCE:

Good maintenance is your responsibility. Poor maintenance is an invitation to trouble.

Make sure there is plenty of ventilation. Never operate the engine of the towing vehicle in a closed building. The exhaust fumes may cause asphyxiation.

Before working on the mixer/feeder, stop the towing vehicle, set the brakes, disengage the PTO and all power drives, shut off the engine and remove the ignition keys.

Be certain all moving parts on attachments have come to a complete stop before attempting to perform maintenance.

Always use a safety support and block the wheels. Never use a jack other than the one supplied with the unit to support the machine.

SAFETY
READ BEFORE YOU FEED

PERFORMING MAINTENANCE (CONT.):

Always use the proper tools or equipment for the job at hand.

Use extreme caution when making adjustments.

Never use our hands to locate hydraulic leaks on attachments. Use a small piece of cardboard or wood. Hydraulic fluid escaping under pressure can penetrate the skin.

When disconnecting hydraulic lines, shut off hydraulic supply and relieve all hydraulic pressure.

Openings in the skin and minor cuts are susceptible to infection from hydraulic fluid. If injured by escaping hydraulic fluid, see a doctor at once. Gangrene can result. Without immediate treatment, serious infection and reactions can occur.

Replace all shields and guards after servicing and before moving.

After servicing, be sure all tools, parts and service equipment are removed.

Do not allow grease or oil to build up on any step or platform.

Never replace hex bolts with less than grade five (5) bolts unless otherwise specified. In some locations a grade 8 fastener may be required, consult your local Roto-Mix Dealer or Roto-Mix Service Department for more information.

Where replacement parts are necessary for periodic maintenance and servicing, genuine factory replacement parts must be used to restore your equipment to original specifications. ROTO-MIX will not claim responsibility for use of unapproved parts and/or accessories and other damages as a result of their use.

If equipment has been altered in any way from original design, ROTO-MIX does not accept any liability for injury or warranty.

A fire extinguisher and first aid kit should be kept readily accessible while performing maintenance on this mixer/feeder.

READ THE FOLLOWING BEFORE WELDING ON THIS MIXER/FEEDER

When welding on your mixer/feeder, do not allow the current to flow through the ball bearings or the roller chains. Ground directly to the item being welded.

Always disconnect the scale instrumentation from the weigh bars or load cells and the power source. Be sure the current does not pass through weigh bars or load cells or scale indicator. The alternator should always be disconnected if the mixer/feeder is not disconnected from the towing vehicle.

CHAIN TENSION

All the single roller chain should be tightened to the point of .042" (1 mm) (dime) clearance is reached between the coils of the 1-1/4" idler tension springs and .068" (1.7 mm) (nickel) clearance is reached between the coils of the 1-3/4" idler tension springs.

LOADING INSTRUCTIONS & PRECAUTIONS

A. Do not add side board extensions to the mixer.

B. Do not overload the mixer. Mixer capacity can be reached by weight or volume. By volume, the rotor bars and wipers should always be visible at the peak of the rotor cycle. If the rotor is completely submerged under the mix, mixing efficiency may be reduced, spillage may occur, and damage to the mixer may result. Maximum capacity by weight can be calculated by multiplying 28 pounds times mixer cubic foot capacity.

C. Load molasses and/or liquid protein supplements first with mixer not running, then add one (1) commodity ingredient before starting the mixer. For the shortest mixing time and maximum mixing efficiency, these items should be added at the first of the loading process.

D. When adding minute supplements or medication in non-liquid form, these ingredients should be loaded in the middle of the loading sequence.

E. RATIONS WITH GROUND HAY:

1. Load molasses (or liquids) first with the mixer not running.

2. Load one (1) commodity ingredient and start mixer.

3. Finish loading commodities, silage, or ground hay. Loading ground hay after mixing liquids with another commodity will prevent molasses hay balls.

NOTE: These procedures may not work on all rations. Loading sequences may be changed to give best possible mix.

ATTENTION:

F. Never load the mixer from the right side (side opposite the discharge) with a front end loader while the mixer is running.

OPERATION:

Trailer mounted mixers can be furnished with single tractor controls or dual controls. Dual controls are standard unless specified.

1. Single controls operate as follows: Spout goes down first - door opens second. Door closes first - spout goes up second.

2. The disadvantage of the single control is that it does not let you adjust the spout height without first closing the door.

Drain rain water out of mixer before use. 1" of rain in a 920-18 equals (101 gal) 843 lbs. of water which will increase the moisture in 1000 lbs. of dry hay (@ 12%) to 52% moisture or 500 lbs. of dry hay (@ 12%) to 67% moisture.

ROTO-MIX will not warranty bent or broken rotor tubes, bent or broken augers caused from misuse, wet hay, foreign objects, and/or overloading.

CAUTION: Do not engage the rotor without first starting the augers.

CAUTION: When turning on the rotor, idle the truck (or tractor) down to 1000 RPM or less.

PREPARING TRACTOR FOR TRAILER MIXER

POSITIONING DRAWBAR

IMPORTANT: Drive components can be damaged from excessive speed. Under no circumstances should a feed mixer equipped with 540 RPM be operated by a tractor with 1000 RPM PTO.

Feed mixers are available with either 540 or 1000 RPM driveline. Match tractor PTO with the feed mixer driveline.

IMPORTANT: To prevent driveline damage, adjust tractor drawbar to recommended setting. Disengage tractor PTO before turning.

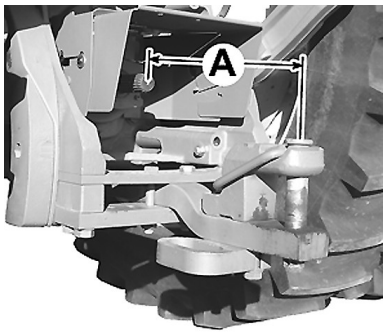

Remove clevis if equipped when there is a clevis used on the mixer tongue.

Adjust drawbar length:

PTO SPEED	DIMENSION (A)
1000 RPM (1-3/8" - 21 SPLINE	16" (406 mm)
1000 RPM 91-3/4" - 20 SPLINE	20" (508 mm)

ADJUST TRAILER HITCH CLEVIS

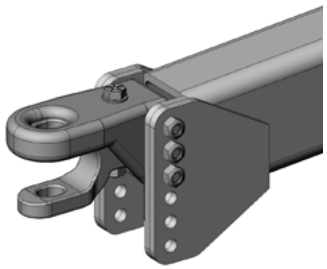

Mixer should be approximately level when attached to tractor.

Adjust clevis by changing hole location on tongue.

Hitch Pin Size — 1” x 7”

LUBRICATION

DISENGAGE PTO & SHUT OFF POWER BEFORE LUBRICATING THE MACHINE.

LOOSE OR FLOPPY CLOTHING SHOULD NOT BE WORN BY THE OPERATOR.

OIL BATH: Fill the oil bath with 30 weight motor oil to sight plug level.

GREASE BANK: Grease every 10 hours.

FRONT END BEARINGS: Grease every 10 hours.

INPUT BEARINGS: One (1) on input shaft beneath mixer/feeder. Grease every 10 hours.

PTO SHAFTS & U-JOINTS: Grease every 10 to 20 hours.

HYDRAULIC PUMP DRIVE: Grease every 10 to 20 hours.

2:1 GEARBOX: Prior to operation, remove the uppermost plug and replace with vent plug provided. After the first 100 hours of operation, drain the initial oil, preferably warm. Flush the gear case with an approved non-flammable, non-toxic solvent and refill with oil. Thereafter oil should be changed every 2000 hours or every 12 months, whichever occurs first. Fill the gearbox with approximately 2-1/2 pints (1.2 liters) of (**Mobil Delvac Synthetic Gear Oil 75W-90**).

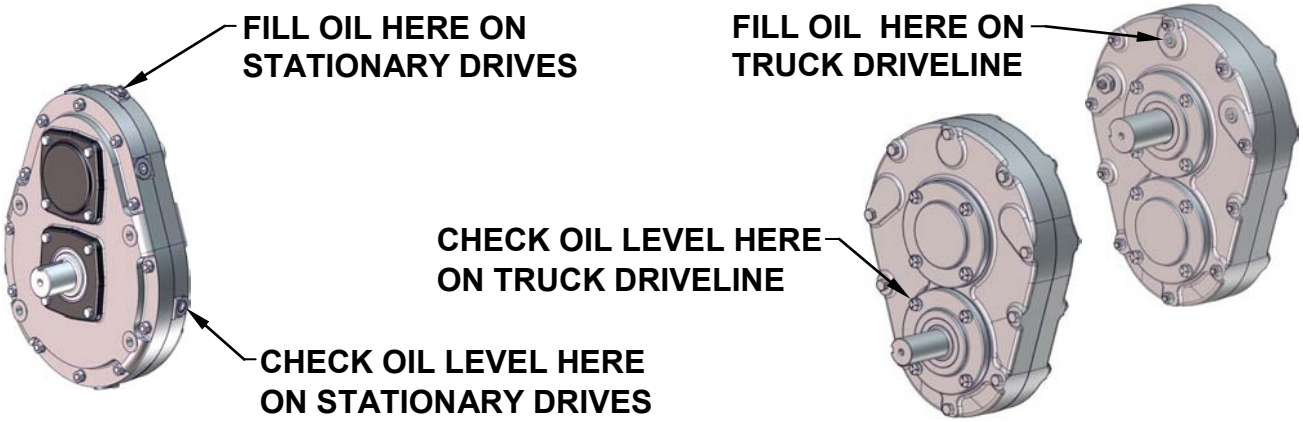

MIXER DOOR CYLINDER HYDRAULICS (TRUCK): Replace hydraulic filter after first 100 hours of operation then every 500 hours of operation with 10 micron element. Replace fluid every 2000 hours of operation or every year, which ever occurs first, with approximately 1 gallon (3.7 liters) of **(CITGO TRANSGARD TRACTOR HYDRAULIC FLUID - Material Code 633310001).**

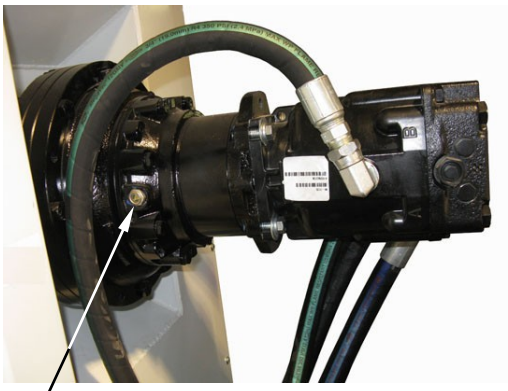

TRUCK OIL SIGHT PLUG LEVEL

TRAILER OIL LEVEL, FILL TO THIS BOLT LEVEL

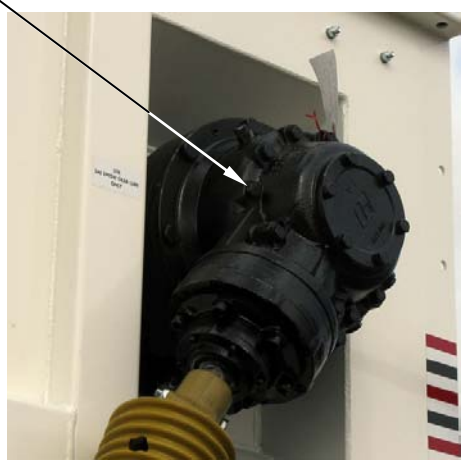

ROTOR GEARBOX SIGHT PLUG LEVEL

PLANETARY GEARBOXES

Prior to operation, check oil level - oil should be visible in sight gauge - if not add to sight gauge level.

After the first 100 hours of operation, drain initial oil, preferably warm. Flush the gear case with an approved non-flammable, non-toxic solvent. Flush gear case with compressed air before refilling. Thereafter oil should be changed every 2000 hours of operation or 12 months, which ever occurs first. Fill the top auger gearbox with approximately 122 oz (3.6 liters) for the Auburn gear box and approximately 108 oz (3.2 liters) for the Brevini gear box and approximately 166 oz (4.9 liters) for the rotor drive assembly with (**Mobil Delvac Synthetic Gear Oil 75W-90**) to sight plug or at centerline of gearbox.

HYDROSTAT MAINTENANCE

The hydraulic system operating the mixing augers is a high pressure closed loop design. Keep oil level in the reservoir visible in sight gauge . The sight gauge is also equipped with a thermometer for registering reservoir oil temperature. Oil temperature in reservoir should not exceed 190° F. The hydraulic filter should be changed the first 100 hours of operation then every 500 hours of operation and with every fluid change. Replace with 10 micron filter element only. The reservoir fluid should be changed every 2000 hours of operation or every 12 months, which ever occurs first. Fill the reservoir to sight gauge with **(CITGO TRANSGARD TRACTOR HYDRAULIC FLUID - Material Code 633310001).** Approximately 28 gallons (106 liters). Visually check daily for any fluid leakage. Do not operate hydraulic system low or without fluid as it could damage system beyond repair.

920-18 SPECIFICATIONS

Capacity (Cu. ft.)	920
Struck level capacity (Cu. ft.)	1035
Top Auger Bearing (Front)	PLANETARY GEARBOX
Top Auger Bearing (Rear)	3-1/2” 4-Bolt
Bottom Auger Bearing (Front)	2-15/16” 4-Bolt
Bottom Auger Bearing (Rear)	3-1/2” 4-Bolt
Rotor Bearing (Front)	3-7/16” 4-Bolt
Rotor Bearing (Rear)	Nylatron Sleeve
Top Auger Sprockets	140 A 26H
Bottom Auger Sprocket	140 C 45
Rotor Sprocket	180 A 85
Heavy Rotor Drive Sprocket	180 A 102
Rotor Drive Sprocket	180 C 11H
Top Auger Flight	3/8” or 1/2” x 24”OD RH 14” Pitch
Bottom Auger Flight	1/2” or 3/4” x 24”OD RH & LH Full Pitch
Tub Bottom Construction	1/4” Steel or 3/8” Steel
Auger Bottom Construction	3/8” Steel
Right Side Sheet Construction	7 GA (3/16”) Steel
Left Side Sheet Construction	7 GA (3/16”) Steel
Front End Sheet Construction	1/4” Steel
Rear End Sheet Construction	1/4” Steel
Rotor Drive PTO	Min. 200 Ft. Lb. Rating
653 Transmission	113% Engine Rotation
WT Transmission	103% Engine Rotation

GEAR BOX OIL CAPACITY

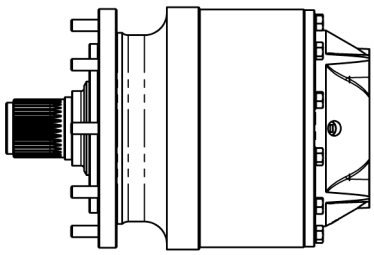

The Auburn Gear Box (above), #344168, used on the top auger drive, takes 122 oz of (**Mobil Delvac Synthetic Gear Oil 75W-90**) to the full level.

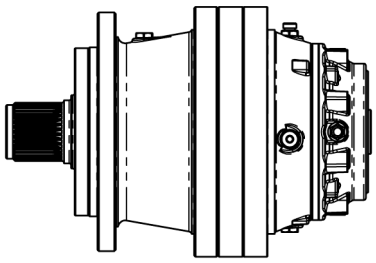

The Brevini Gear Box (above), #344161, used on the top auger drive, takes 108 oz of (**Mobil Delvac Synthetic Gear Oil 75W-90**) to the full level.

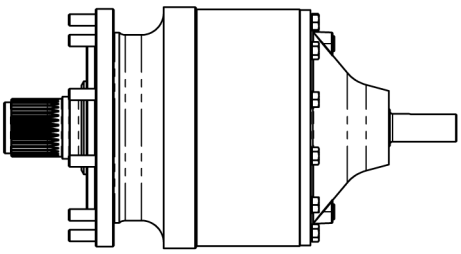

The Auburn Gear Box (left), #344169, used on the rotor drive assembly, takes 166 oz of (**Mobil Delvac Synthetic Gear Oil 75W-90**) to the full level.

All Dimensions & Specifications are Approximate and Subject to Change Without Notice

SERVICING THE TOP AUGER DRIVE

920-18 STATIONARY
Auburn Gearbox

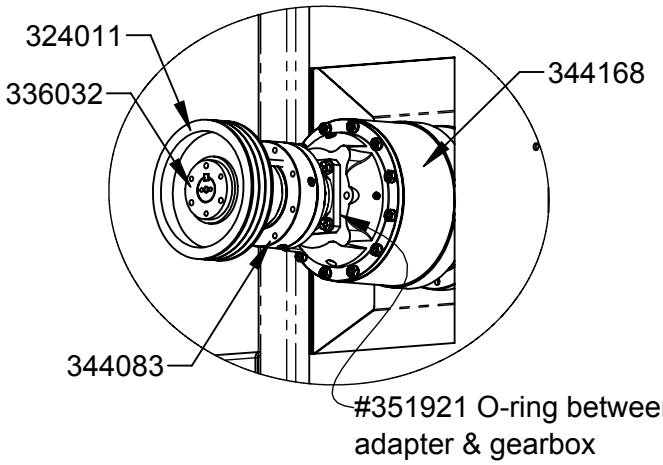

920-18 STATIONARY
Brevini Gearbox

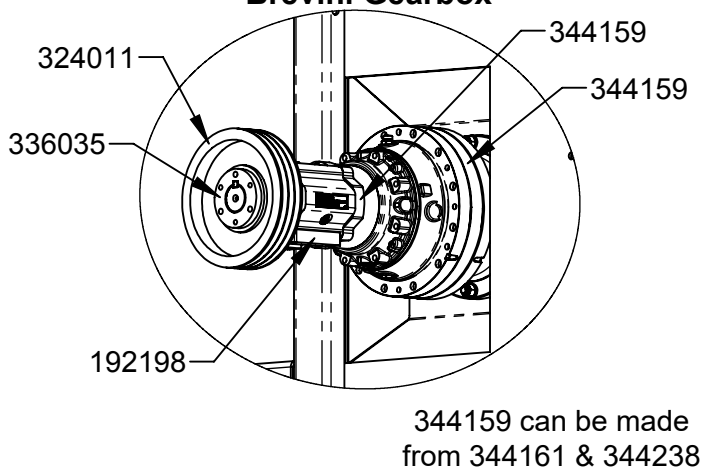

920-18 TRUCK
Auburn Gearbox

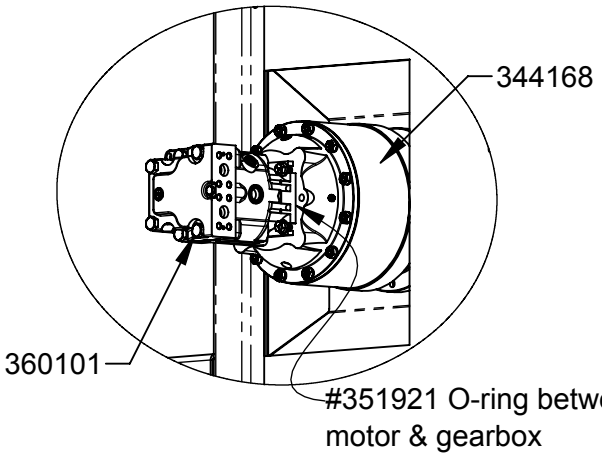

920-18 TRUCK
Brevini Gearbox

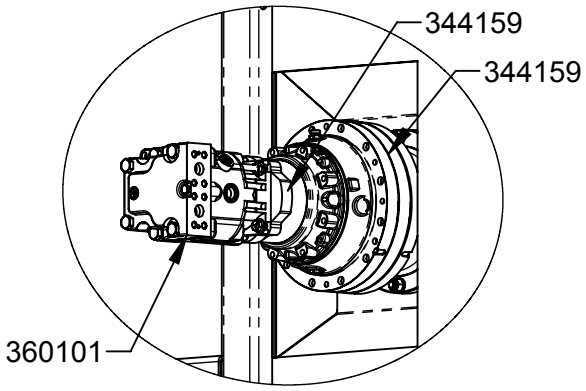

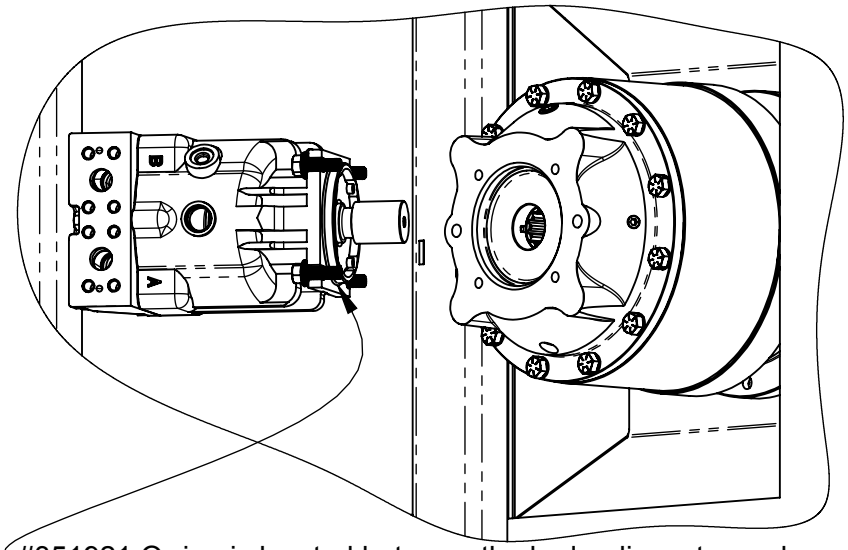

#351921 O-ring is located between the hydraulic motor and the Auburn gearbox on truck units and between the overhung load adapter and the Auburn gearbox on stationary units, (see illlustration at top left for Stationary application).

Note for Service:
When separating the hydraulic motor or the overhung load adapter from the Auburn gearbox the oil in the gearbox will drain between the two components down to just below the half way point of the gearbox.

To minimize an oil spill,the oil can be drained from the gearbox to a level just below the half way point.

When reinstalling the hydraulic motor or overhung load adapter to the Auburn or the Brevini gearbox, refill the gearbox and to older over-hung load adapter to the half way point check plug with **(Mobil Delvac Synthetic Gear Oil 75W-90)**.

920-18 TRUCK DIMENSIONS

HEIGHT DIMENSIONS BASED ON 40” TRUCK FRAME

24” SPOUT STANDARD

APPROX. WEIGHT 920-18 ON TRUCK—20,700 LBS.

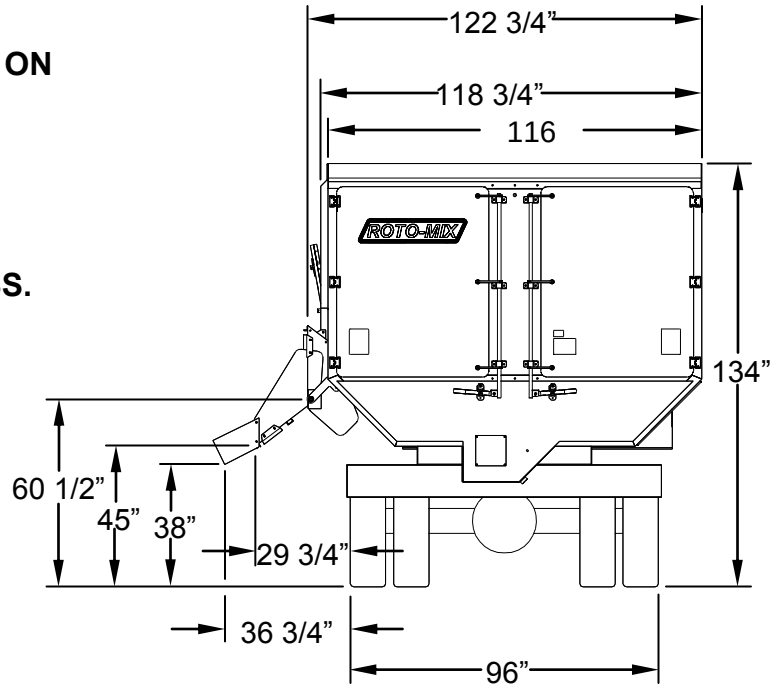

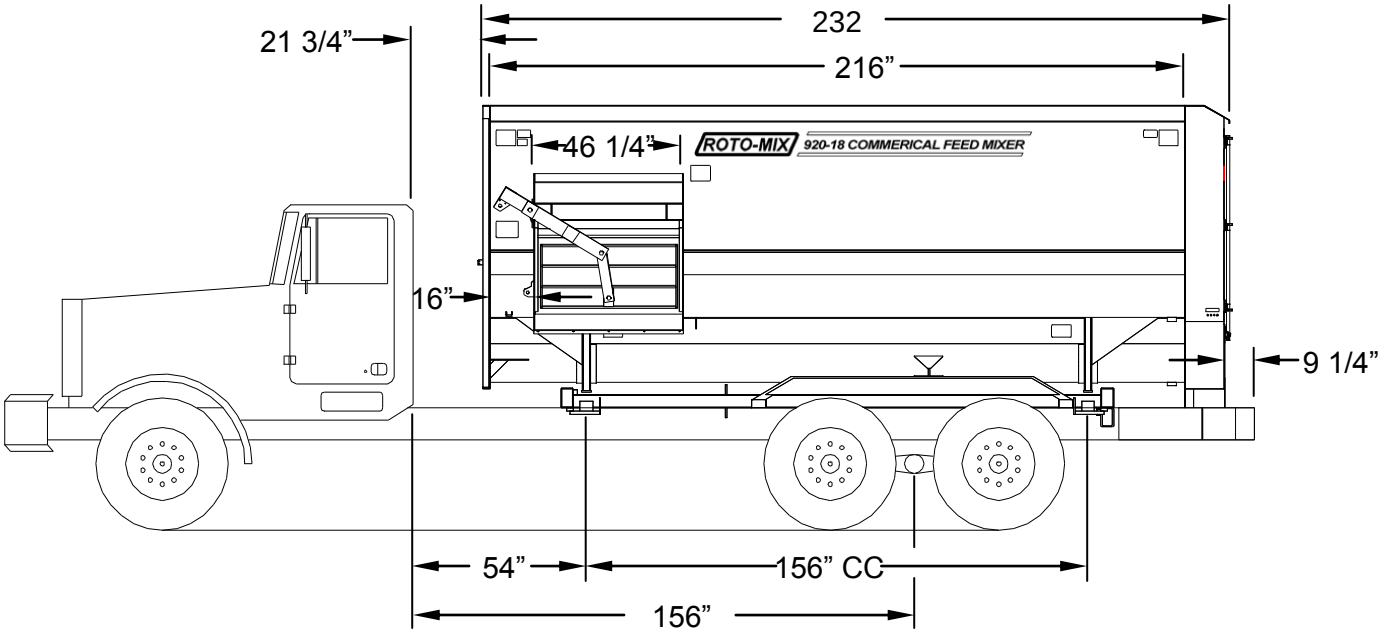

All Dimensions & Specifications are Approximate and Subject to Change Without Notice

920-18 TRUCK MOUNTING DIMENSIONS

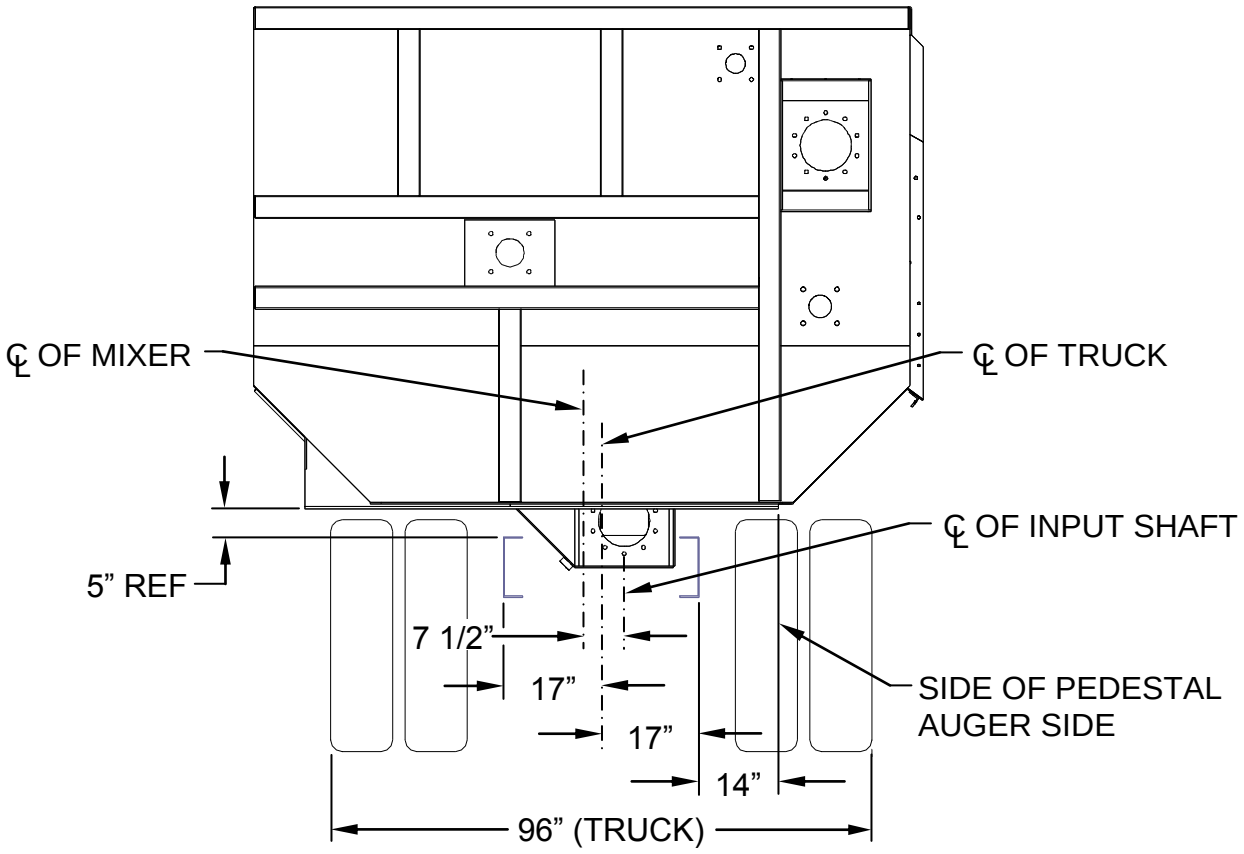

All Dimensions & Specifications are Approximate and Subject to Change Without Notice

920-18 TRAILER DIMENSIONS

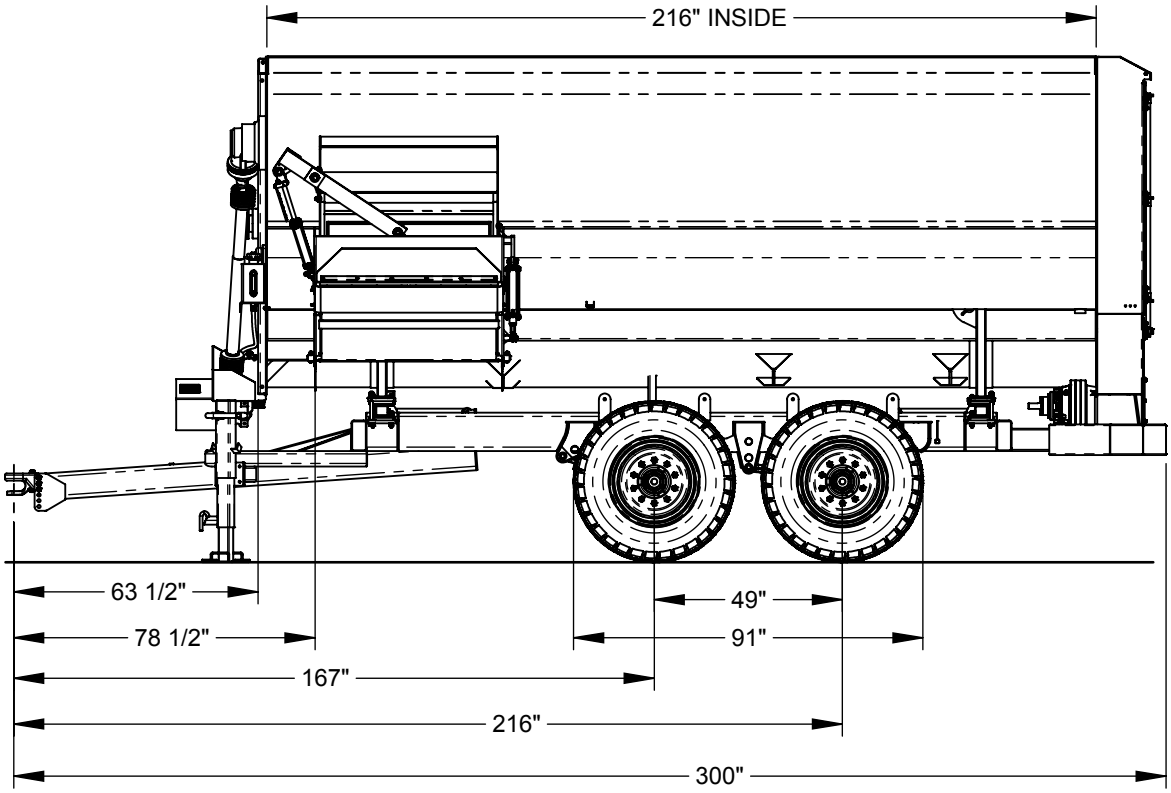

FRONT VIEW with SPOUT DOWN

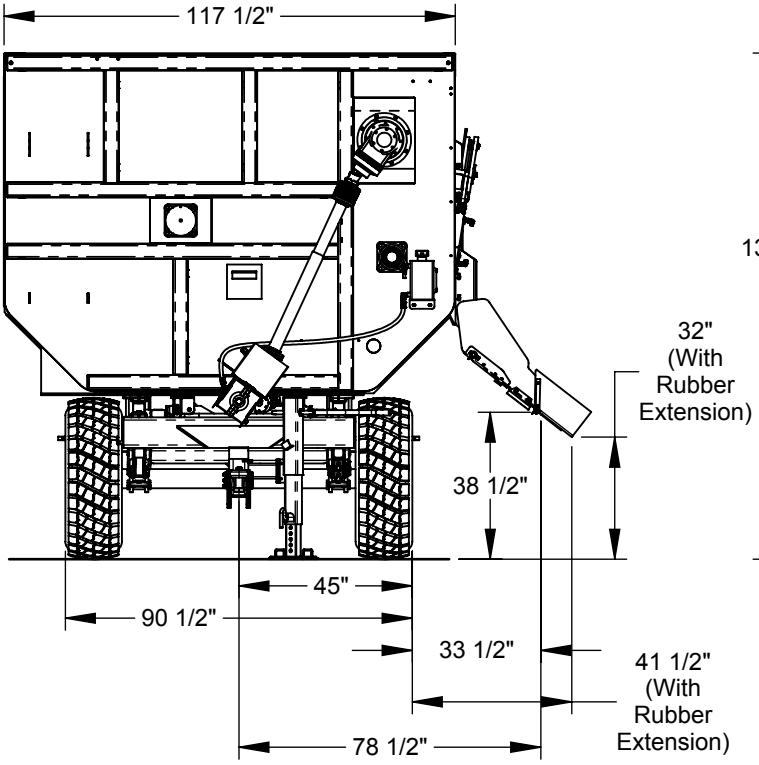

FRONT VIEW with SPOUT UP

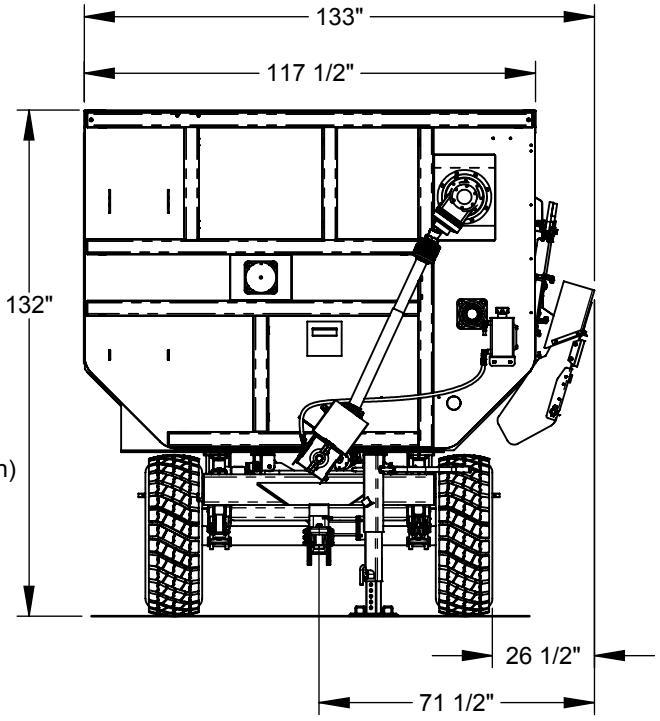

All Dimensions & Specifications are Approximate and Subject to Change Without Notice

920-18 STATIONARY DIMENSIONS

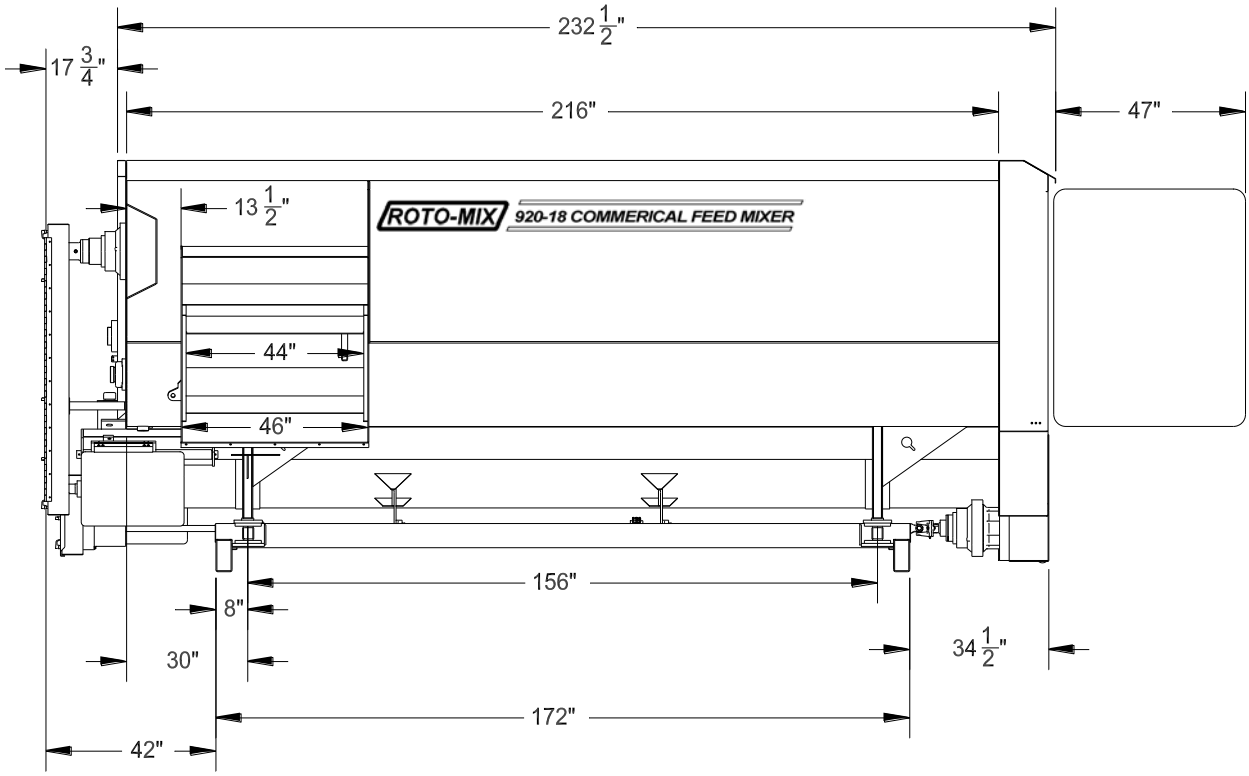

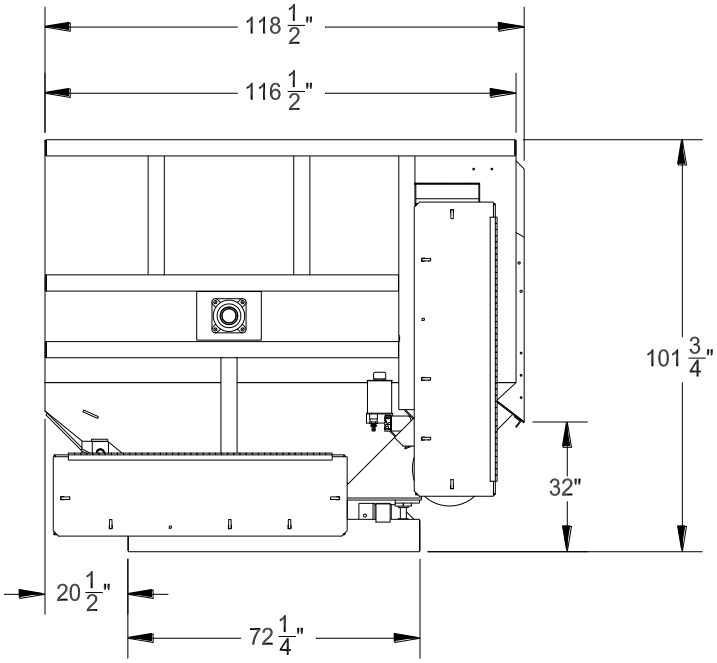

All Dimensions & Specifications are Approximate and Subject to Change Without Notice

This Page intentionally left blank.

How to read a Roto-Mix Serial Number

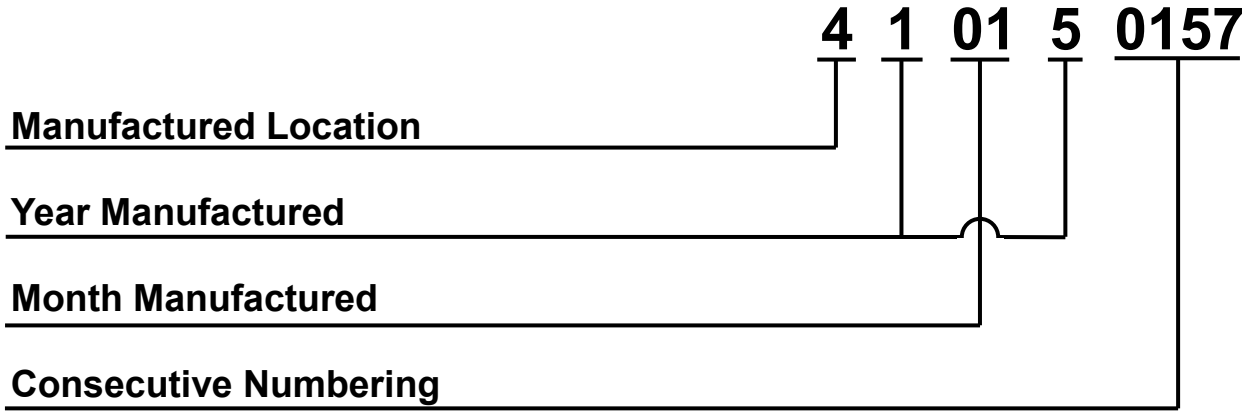

REPAIR PARTS
TABLE OF CONTENTS

DESCRIPTION **PAGE NO.**

ELECTRICAL - CONTROLS, & WIRING 34-35
HYDRAULICS - PUMPS, MOTORS, & VALVES 36-47
DISCHARGE - DOOR & SPOUT 48-51
AUGERS - TOP & BOTTOM 52-59
ROTORS - 5 ARM, 6 ARM & STAGGERED 60-62
FRONT END ASSEMBLY 63
DRIVELINE - TRUCK, TRAILER, & STATIONARY 64-73
STATIONARY - ELECTRIC DRIVE & HYDRAULICS 74-79
DOORS - OIL BATH 80-81
SCALES - LOAD CELLS 82-84
TRAILER - FRAME, HUB & SPINDLES 85-86
TRUCK - PLATFORM, FENDERS & MUD FLAPS 87-88
CROSS OVER BARS & HAY PROCESSOR 89-91
DRIVE - OIL BATH, TOP AUGER, BTM AUGER & ROTOR 92-100
HYDRAULIC - OIL COOLER 102-103
SHELL - REPAIR PARTS 104-105
TRUCK - CAB PARTS & BUMPERS 106-112

920-18 JOYSTICK CONTROL PANEL & WIRING

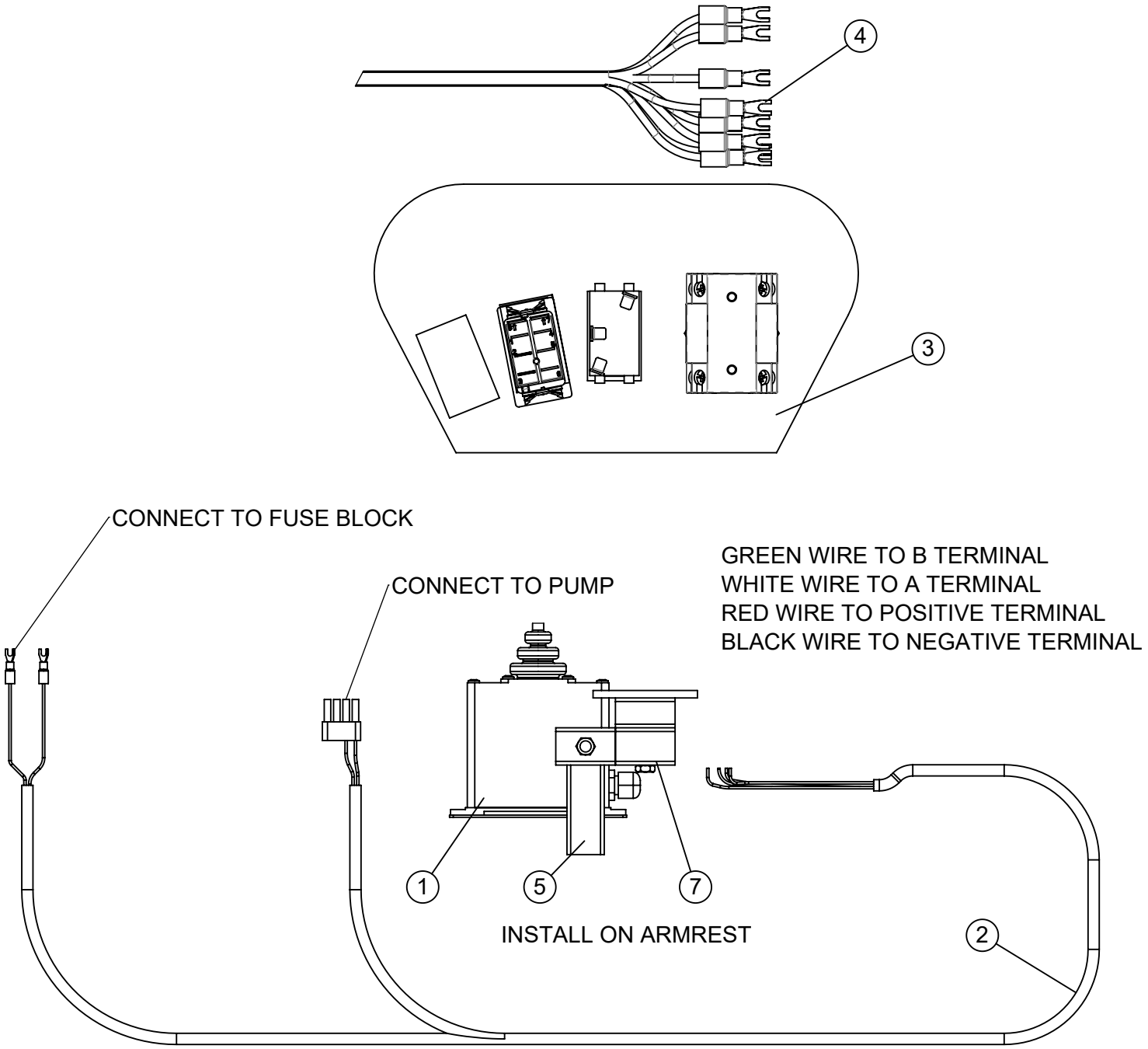

ITEM #	PART #	DESCRIPTION	QTY.
1	357710	MACHINE CONTROL HANDLE	1
2	358444	TRUCK EDC HARNESS	1
3	780081	JOYSTICK SWITCH PANEL ASSY	1
4	781055	TRUCK TO MIXER WIRE ASSY	1
5	873455	EDC HANDLE MOUNT WA	1
	873457	EDC HANDLE DUAL MOUNT WA	1
7	873453	ARM REST MOUNT WA	1

920-18 JOYSTICK CONTROL PANEL & WIRING

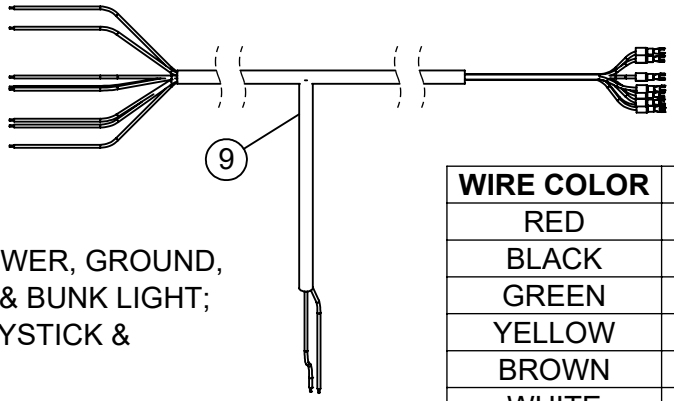

WIRE COLOR	FUNCTION
RED	POWER
BLACK	GROUND
GREEN	DOOR STACK VALVE
YELLOW	DOOR STACK VALVE
BROWN	SPOUT STACK VALVE
WHITE	SPOUT STACK VALVE
PURPLE	BUNK LIGHTS

BARE ENDS FOR POWER, GROUND, HYDRAULIC VALVE, & BUNK LIGHT; FORK ENDS FOR JOYSTICK & ROCKER SWITCHES

USE DIN CONNECTORS FOR HYDRAULIC STACK VALVE

USE HARNESS SUPPLIED WITH PTO FOR PTO SWITCH & LIGHT

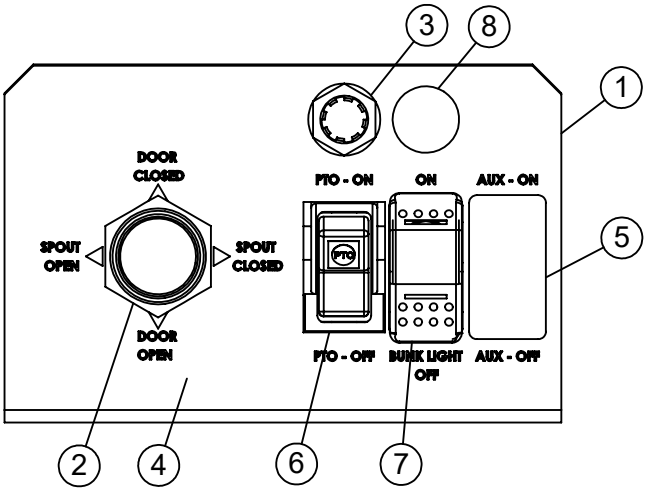

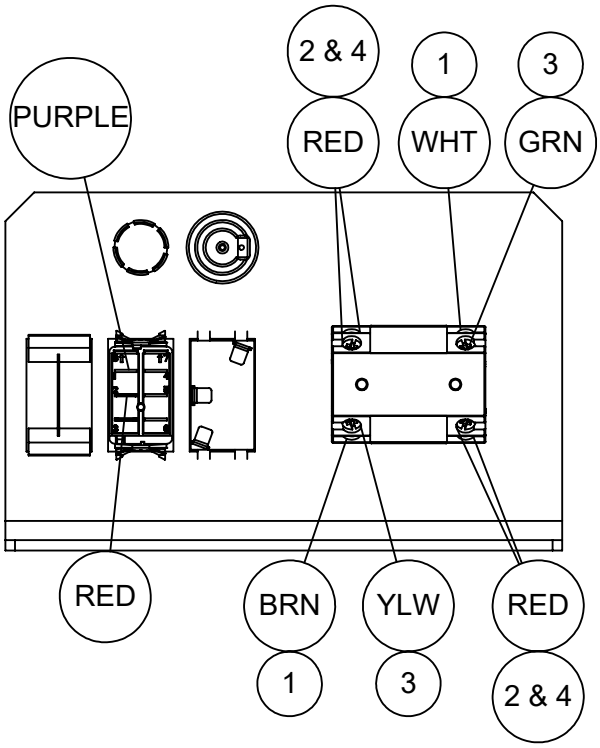

ITEM #	PART #	DESCRIPTION	QTY.
1	190928	TRUCK SWITCH PANEL	1
2	357705	JOYSTICK, (4-WAY) SCHNEIDER 9001K35	1
3	357753	LIGHT, RED INDICATOR, 3/4" DIA.	1
4	440835	DECAL, 4-WAY JOYSTICK - HORIZONTAL	1
5	452726	PLUG, PANEL	1
6	452730	SWITCH, ROCKER ON-OFF	1
7	452744	SWITCH, ROCKER ON-OFF, SPST	1
8	452763	PLUG, PANEL 11/16" DIA	1
9	781055	TRUCK TO MIXER WIRE ASSY	1

920-18 ENGINE DRIVE PUMP with PTO DRIVE ROTOR

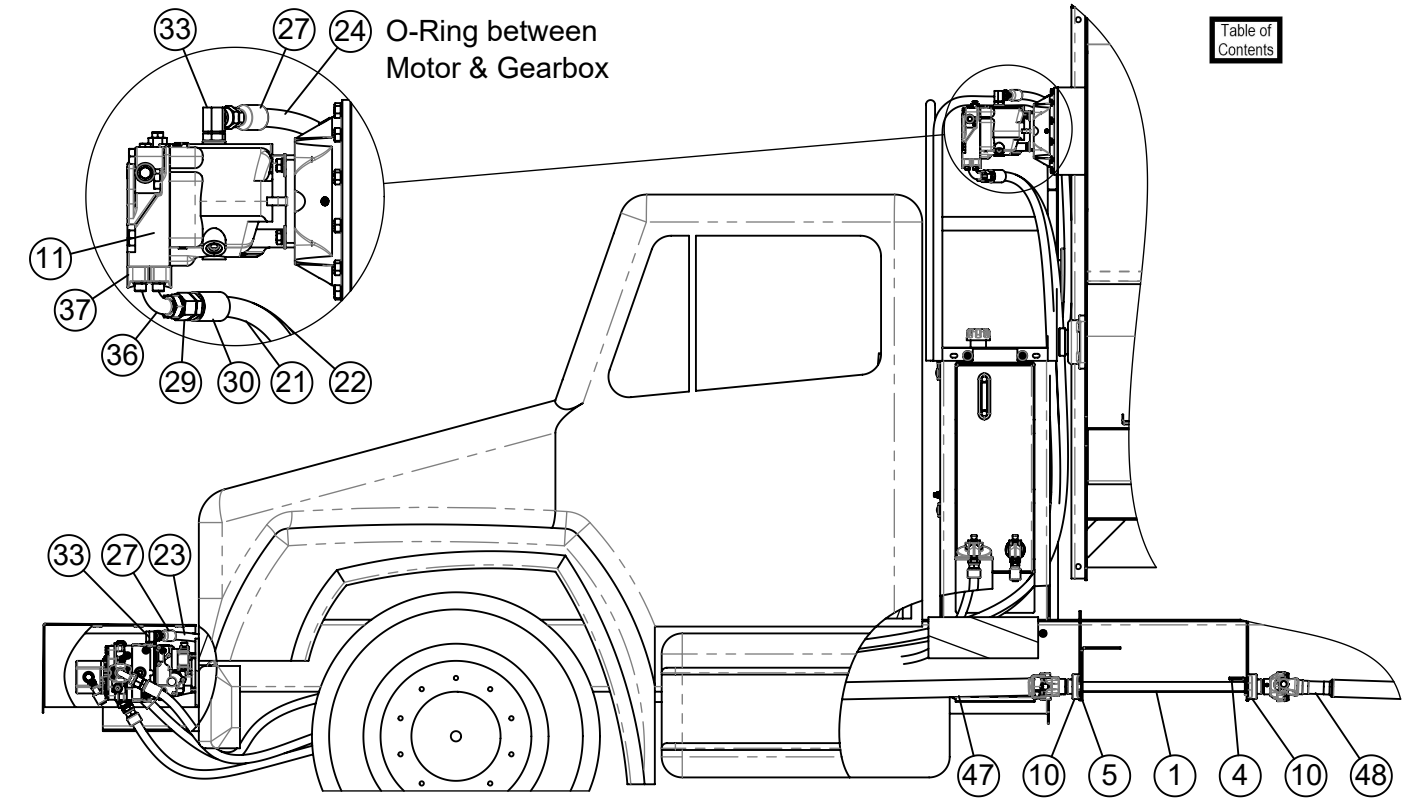

Table of Contents

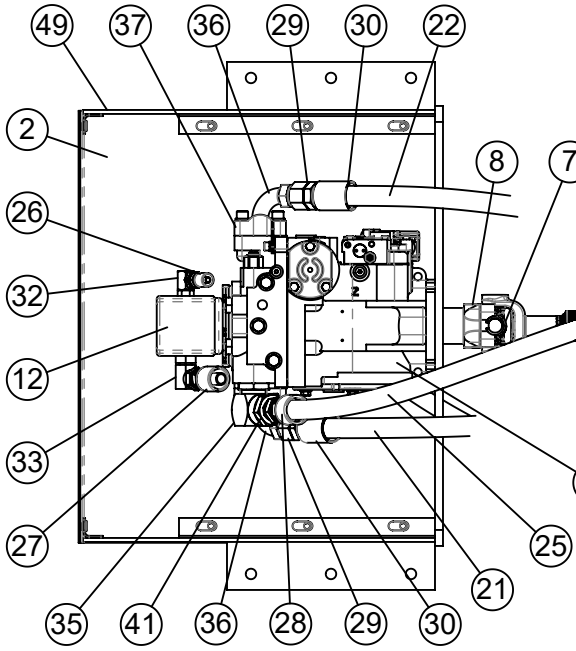

SECTION A-A

HYDROSTAT RESERVOIR & COMPONENTS

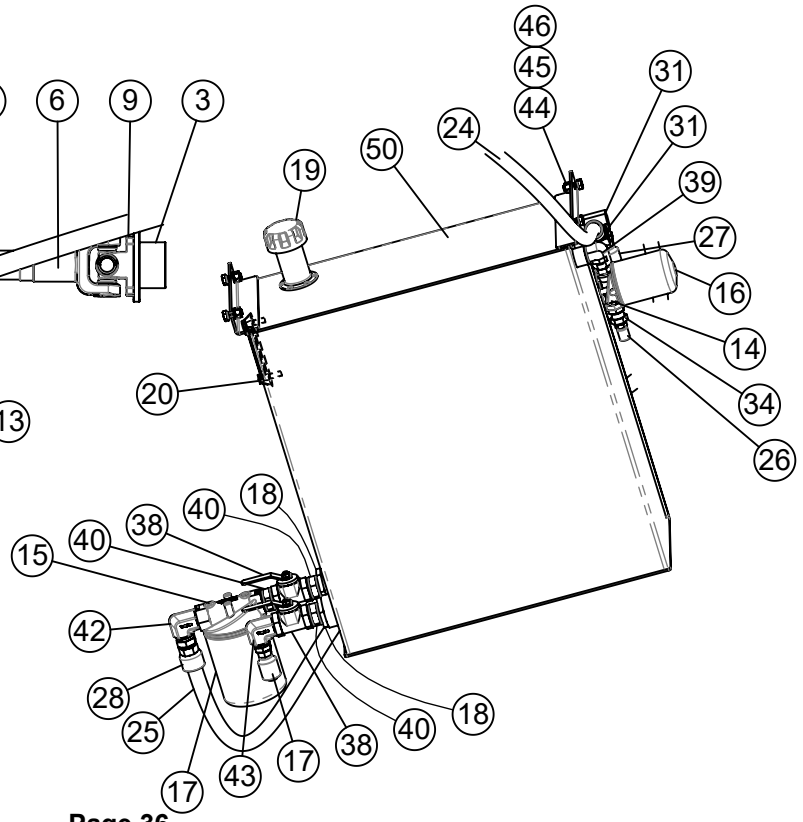

920-18 ENGINE DRIVE PUMP with PTO DRIVE ROTOR

ITEM #	PART #	DESCRIPTION	QTY.
1	183327	JACKSHAFT, TRK, 1-3/8" x 32"	1
2	189216	LONG PUMP BOX COVER 22-1/4"	1
3	189585	ENGINE DRIVE FLANGE	1
4	192032	REAR JACKSHAFT BEARING MOUNT - 920	1
5	192033	TRUCK JACKSHAFT BRACKET - FORMED	1
6	338054	SPICER DRIVE SHAFT ASSY 7703-5204	2
7	338413	U STRAP & BOLT KIT 3-70-28X (1350)	1
8	338415	SPICER YOKE 1350 1-1/2" TAPER	1
9	338429	FLANGE YOKE, SPICER 1350	2
10	340222	BEARING, 1 3/8" VCJT	2
11	360101	HYDRAULIC MOTOR, 13/SPL 1.36" DANFOSS 100cc	1
12	362009LH	GEAR PUMP 1.08 IN³ LH	1
13	362097	HYDRAULIC PUMP, 100cc EDC W/ 9T PAD	1
14	362403	FILTER HEAD 3/4", ZAF-07-25-0	1
15	362404	FILTER HEAD, 1-1/4" FP	1
16	362440	FILTER ELEMENT - AE-10	1
17	362442	FILTER ELEMENT 1-1/4"	1
18	362507	SUCTION SCREEN 2" x 1 1/4" (100 MESH)	2
19	362551	HI-NECK FILLER CAP ASSY.	1
20	362555	SIGHT GAUGE 5"	1
21	366029	16EFG4K HOSE PUMP "A" TO MOTOR "B"	1
22	366029	16EFG4K HOSE PUMP "B" TO MOTOR "A"	1
23	366033	12GMV HOSE PUMP CASE DRAIN TO RES.	1
24	366033	12GMV HOSE MOTOR CASE DRAIN TO RES.	1
25	366040	16GMV HOSE RES. TO PUMP INLET	1
26	367068	HOSE COUPLING, 3/8" x 1/2" MP MEGACRIMP	2
27	367104	HOSE COUPLING, 3/4" x 3/4" MP MEGACRIMP	7
28	367128	HOSE STEM, 1" x 1" MP 16G-16MP MEGA	2
29	367130	HOSE STEM, 1" x 1"FJX 16GS-16FJX	6
30	367415	FERRULE, 16GS1F-4	6
31	368045	HYD SWIVEL, 1" MP x 3/4" FPS 90º	2
32	368047	HYD SWIVEL 7/8"MOR x 1/2"FP 90°	1
33	368057	HYD SWIVEL 1-1/16" MOR x 3/4"FPS 90°	4
34	368113	STRAIGHT SWIVEL, 3/4" MP x 1/2" FPS	1
35	368420	ELBOW, 1-5/8" MOR x 1-1/4" FP 90º	1
36	368450	FLANGE ADAPTER 16FLH-16MJ90 CODE 62	4
37	368451	FLANGE SET 16 FHH SPLIT C62 (1")	6
38	368525	GATE VALVE 1-1/4" FP	2
39	368625	HYD ADAPTER, 1MP x 3/4MP 90°	1
40	368648	HEX NIPPLE, 1-1/4" MP x 1-1/4" MP	3
41	368723	STRAIGHT SWIVEL 1-1/4" MP x 1" FP	1
42	368724	ELBOW, 90° 1-1/4"MP x 1"FP SWIVEL	1
43	368725	ELBOW, 90° 1-1/4 MP x 3/4FP SWIVEL	1
44	400208	HEX NUT 1/2"-13 #5 PLTD	4
45	402008	SPRING LOCK WASHER 1/2" PLTD	4
46	405702	HHCS 1/2"-13 x 1-1/4" #5 PLTD	4
47	780488	1350 DRIVESHAFT ASSY 1-1/4" x 1-3/8"	1
48	780496	1350 DRIVE SHAFT ASSY 1-3/8" x 1-3/8"	1
49	872388	LONG PUMP BOX 22-1/4"	1
50	873153P	HYDROSTAT RESERVIOR WA	1

920-18 DUAL HYDRAULIC PUMP DRIVE

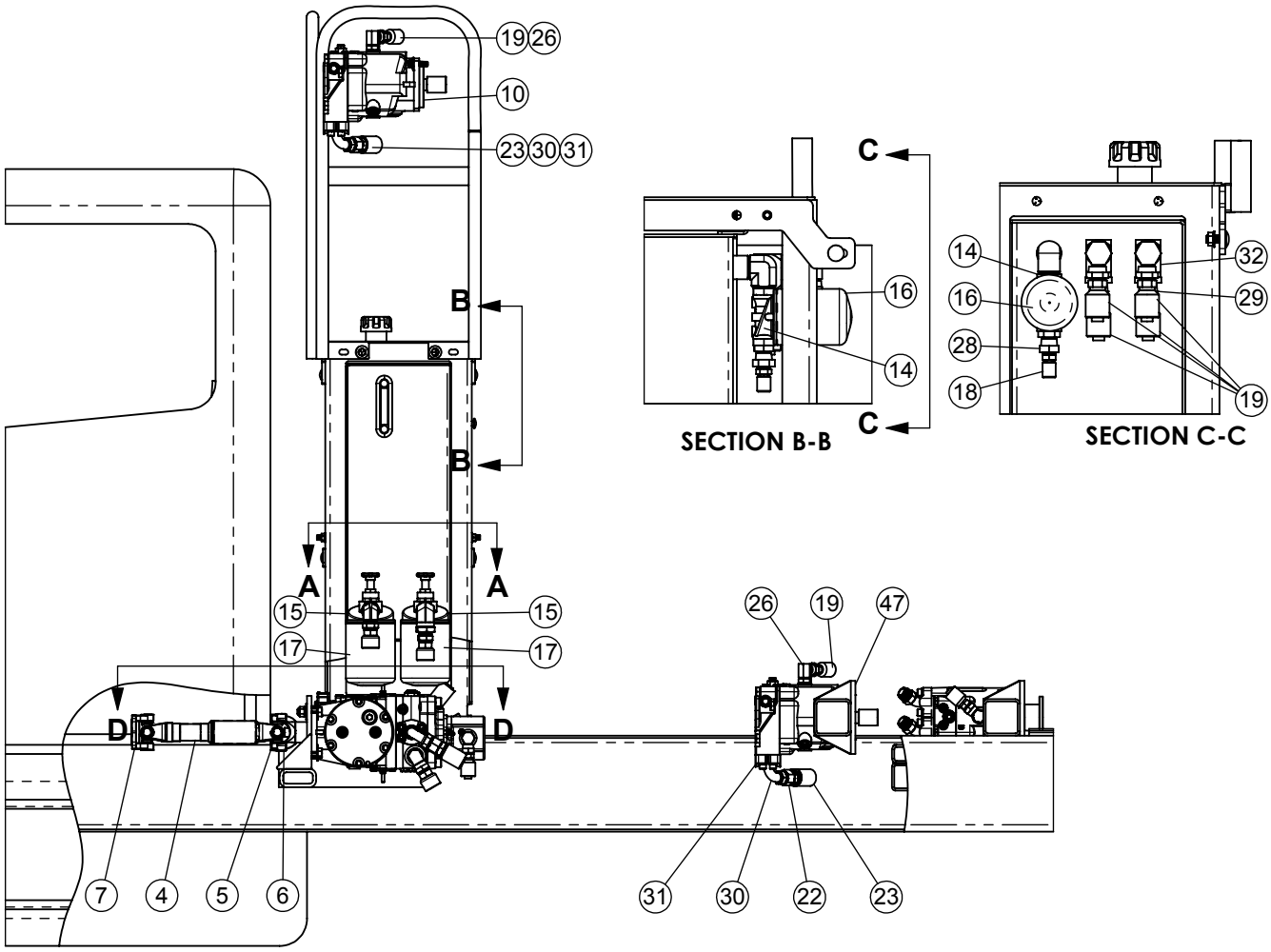

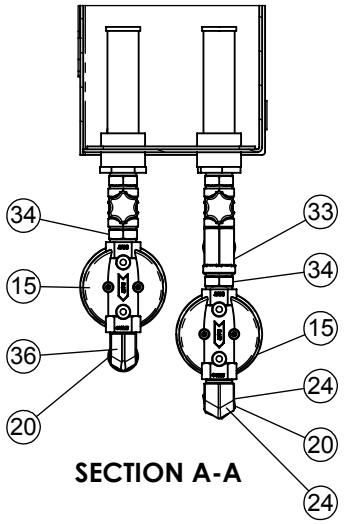

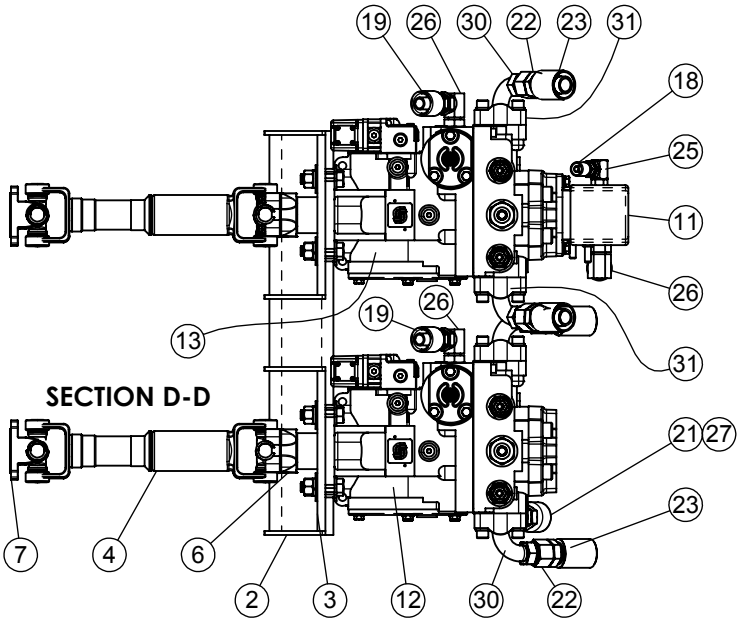

920-18 DUAL HYDRAULIC PUMP DRIVE

ITEM #	PART #	DESCRIPTION	QTY.
1	185483	KEY 5/16" SQ x 1-1/4" LG.	2
2	187188	GUSSET 1/4" x 4" x 4"	2
3	189217	22,075,100 MOTOR PLATE 8" x 10"	1
4	338054	SPICER DRIVE SHAFT ASSY 7703-5204	2
5	338413	U STRAP & BOLT KIT 3-70-28X (1350)	2
6	338415	SPICER YOKE 1350 1-1/2" TAPER	2
7	338429	SPICER FLANGE YOKE 3-2-119 1350	2
8	357710	MACHINE CONTROL HANDLE	1
9	358444	TRUCK EDC HARNESS	1
10	360101	HYDRAULIC MOTOR, DANFOSS 100cc	1
11	362009	GEAR PUMP, 1.08 CU IN	1
12	362074RH	PUMP 75CC EDC RH TAP'D SHAFT DANFOSS	1
13	362105	HYDRO PUMP, 100CC EDC RH W/ 9T PAD	1
14	362403	FILTER HEAD 3/4", ZAF-07-25-0	1
15	362404	FILTER HEAD, 1-1/4" FP	2
16	362440	FILTER ELEMENT - AE-10	1
17	362442	FILTER ELEMENT SE-10	2
18	367068	HOSE COUPLING, 3/8" x 1/2" MP MEGA	1
19	367104	HOSE STEM, 3/4" x 3/4"MP 12G-12MP MEGA	6
20	367128	HOSE STEM, 1" x 1"MP 16G-16MP MEGA	1
21	367129	HOSE STEM, 1" x 1"MPX 16G-16MPX MEGA	1
22	367130	HOSE STEM, 1" x 1"FJX 16GS-16FJX	5
23	367415	FERRULE, 16GS1F-4	5
24	368036	ELBOW, STREET 90º 1-1/4"MP x 1-1/4"FP	1
25	368047	HYD SWIVEL 7/8"MOR x 1/2"FP 90°	1
26	368057	SWIVEL, 90° 1-1/16"MOR x 3/4"FPS	3
27	368063	HYD FITTING 1-5/16" MOR x 1" FPS - 90deg.	1
28	368113	STRAIGHT SWIVEL, 3/4" MP x 1/2" FPS	1
29	368122	STR ADAPTER, 1" MP x 3/4" FPS	3
30	368450	FLANGE ADAPTER 16FLH-16MJ90 CODE 62	5
31	368451	FLANGE SET 16 FHH SPLIT C62 (1")	7
32	368620	STREET TEE 1" MP x 1" FP x 1" FP 5602-16	2
33	368631	STREET TEE, 1-1/4"	1
34	368648	HEX NIPPLE, 1-1/4" MP x 1-1/4" MP	1
35	368666	HEX REDUCER, 1-1/4" MP x 1" FP	1
36	368724	ELBOW, 90° 1-1/4"MP x 1"FP SWIVEL	1
45	453202	TERMINAL STRIP (5)	1
46	453717	J-BOX SHELL	1
47	872389	HYD MOTOR MOUNT WA	1

920-18 STACKED HYDRAULIC PUMP DRIVE

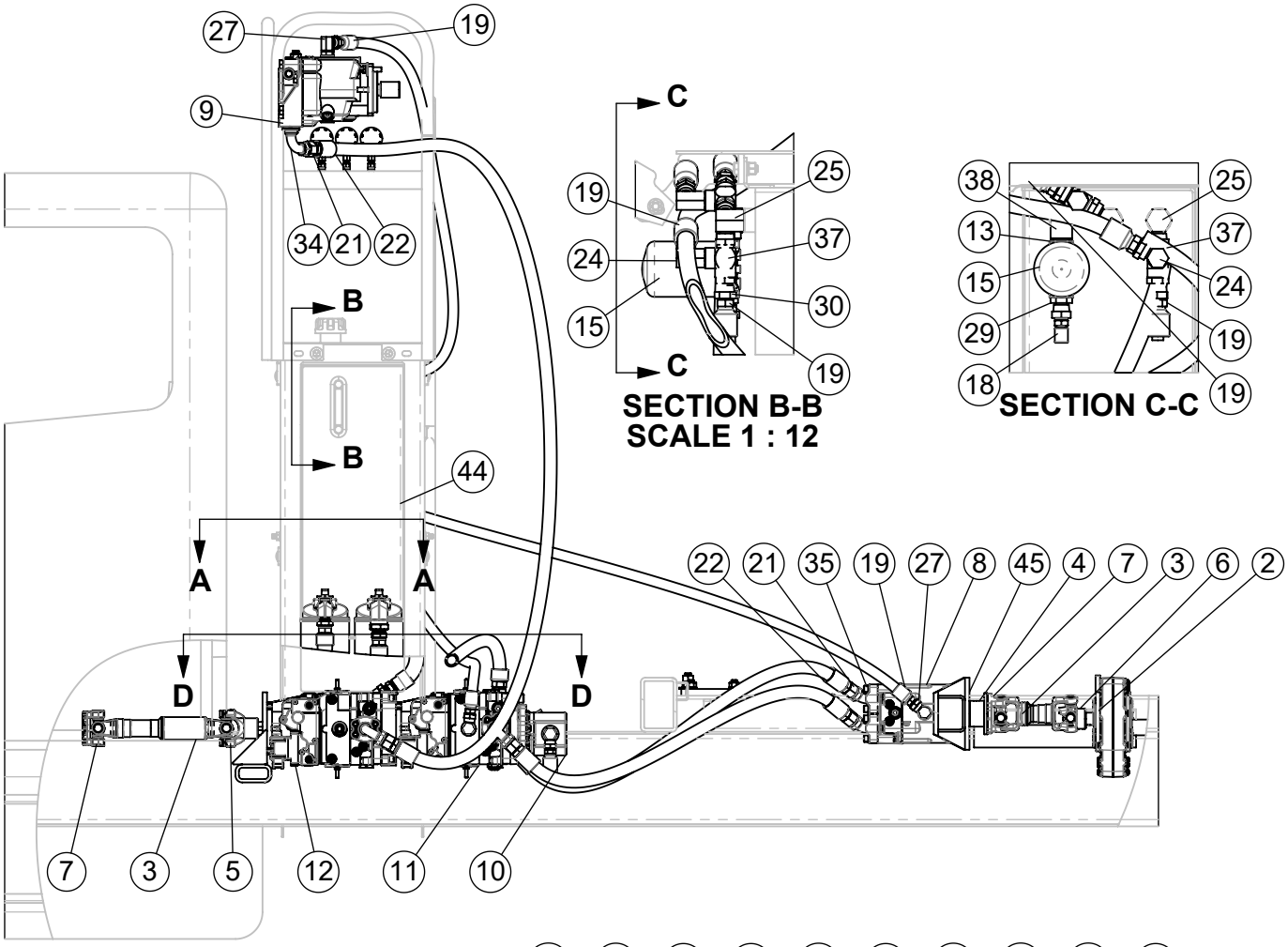

SECTION B-B
SCALE 1 : 12

SECTION C-C

SECTION D-D

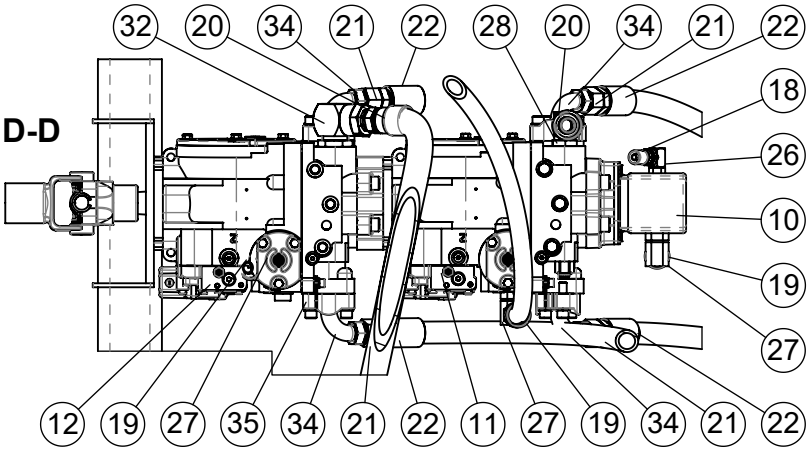

SECTION A-A

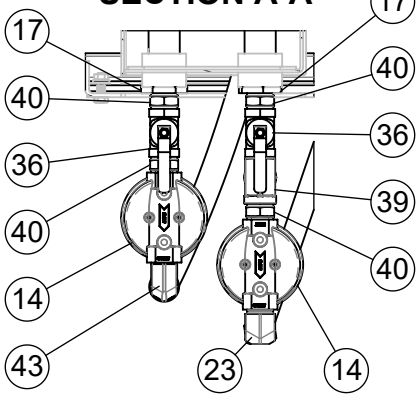

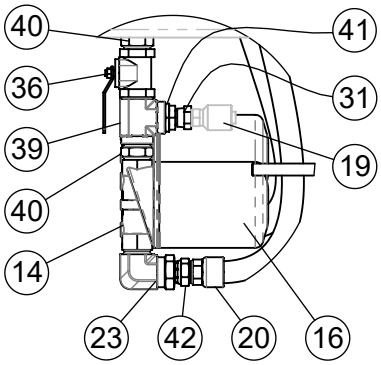

920-18 STACKED HYDRAULIC PUMP DRIVE

ITEM #	PART #	DESCRIPTION	
1	190792	920 GEARBOX PLATE ANGLE	2
2	192281	920 GEARBOX PLATE HORIZONTAL	1
3	338054	SPICER DRIVE SHAFT ASSY 7703-5204	2
4	338406	COMPANION FLANGE, 1350, 1-1/2" BORE	1
5	338415	SPICER YOKE 1350 1-1/2" TAPER	1
6	338424	YOKE 1-3/8" RD BORE, 5/16" KWY (3-4-613-1)	1
7	338429	FLANGE YOKE, SPICER 1350	2
8	360075	DANFOSS 75CC HYDRAULIC MOTOR	1
9	360101	HYDRAULIC MOTOR, DANFOSS 100cc	1
10	362009	GEAR PUMP, 1.08 CU IN	1
11	362079	PUMP 075 EDC RH-14T W/PAD-9T	1
12	362106	Pump 100 EDC RH w/SAE C Pad 14T	1
13	362403	FILTER HEAD 3/4", ZAF-07-25-0	1
14	362404	FILTER HEAD, 1-1/4" FP	2
15	362440	FILTER ELEMENT - AE-10	1
16	362442	FILTER ELEMENT 1-1/4"	2
17	362507	SUCTION SCREEN 2" x 1 1/4" (100 MESH)	2
18	367068	HOSE COUPLING, 3/8" x 1/2" MP MEGACRIMP	2
19	367104	HOSE COUPLING, 3/4" x 3/4" MP MEGACRIMP	12
20	367128	HOSE STEM, 1" x 1" MP 16G-16MP MEGA	6
21	367130	HOSE STEM, 1" x 1"FJX 16GS-16FJX	8
22	367415	FERRULE, 16GS1F-4	8
23	368036	ELBOW, STREET, 1-1/4" MP x 1-1/4" FP 90°	1
24	368042	HYD SWIVEL, 3/4" MP x 3/4" FPS 90°	3
25	368045	HYD SWIVEL, 1" MP x 3/4" FPS 90º	2
26	368047	HYD SWIVEL 7/8"MOR x 1/2"FP 90°	1
27	368057	HYD SWIVEL 1-1/16" MOR x 3/4"FPS 90°	5
28	368063	HYD FITTING 1-5/16" MOR x 1" FPS - 90deg.	1
29	368113	STRAIGHT SWIVEL, 3/4" MP x 1/2" FPS	1
30	368117	HYD SWIVEL, 3/4" MP x 3/4" FPS STRAIGHT	3
31	368122	HYD SWIVEL, 1" MP x 3/4" FPS STRAIGHT	1
32	368420	ELBOW, 1-5/8" MOR x 1-1/4" FP 90º	3
33	368449	FLANGE ADAPTER 16FLH-16MJ45 CODE 62	2
34	368450	FLANGE ADAPTER 16FLH-16MJ90 CODE 62	6
35	368451	FLANGE SET 16 FHH SPLIT C62 (1")	8
36	368525	GATE VALVE 1-1/4" FP	2
37	368616	STREET TEE 3/4"MP x 3/4"FP x 3/4"FP	3
38	368625	HYD ADAPTER, 1MP x 3/4MP 90°	1
39	368631	STREET TEE, 1-1/4"	1
40	368648	HEX NIPPLE, 1-1/4" MP x 1-1/4" MP	4
41	368666	HEX REDUCER, 1-1/4" MP x 1" FP	1
42	368723	STRAIGHT SWIVEL 1-1/4" MP x 1" FP	3
43	368724	ELBOW, 90° 1-1/4"MP x 1"FP SWIVEL	1
44	782042	920 HYDROSTAT RESERVOIR ASSEMBLY	1
45	872389	HYD MOTOR MOUNT WA	1

920-18 REAR PTO HYDRAULIC PUMP & PTO ROTOR DRIVE

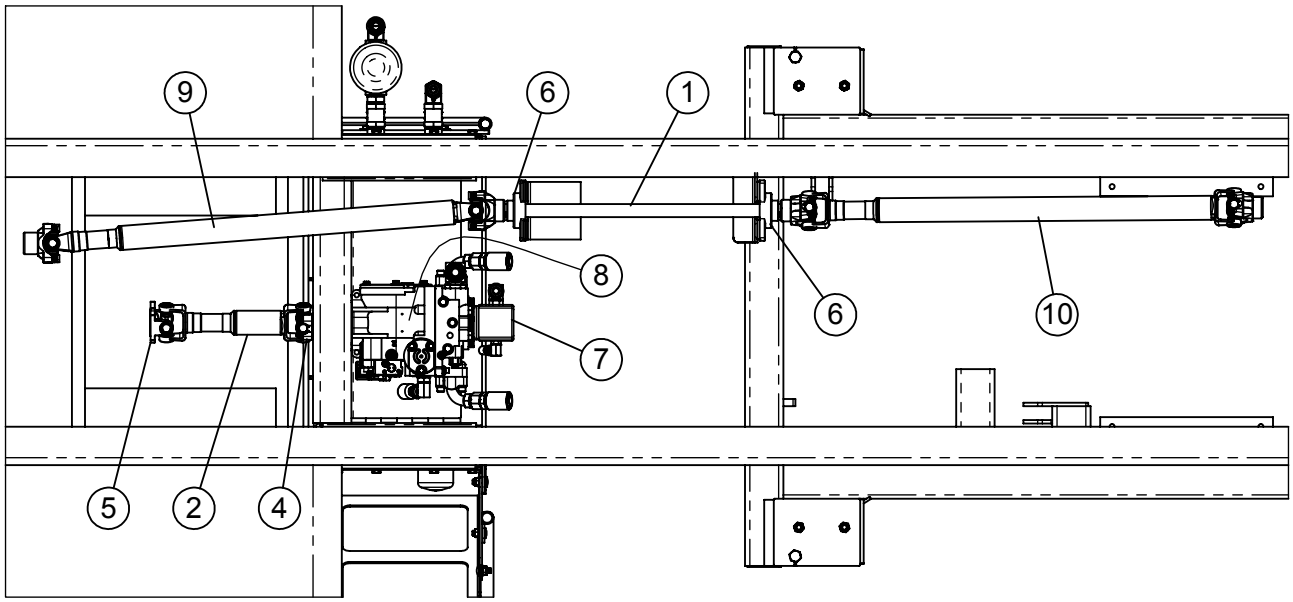

BOTTOM VIEW

ITEM #	PART #	DESCRIPTION	QTY.
1	183327	JACKSHAFT, TRK, 1-3/8" x 32"	1
2	338054	SPICER DRIVE SHAFT ASSY 7703-5204	1
3	338413	U STRAP & BOLT KIT 3-70-28X (1350)	1
4	338415	SPICER YOKE 1350 1-1/2" TAPER	1
5	338429	FLANGE YOKE, SPICER 1350	1
6	340222	BEARING, 1 3/8" VCJT	2
7	362009	GEAR PUMP, 1.08 CU IN	1
8	362105	HYDRAULIC PUMP, RH 100cc EDC W/ 9T PAD	1
9	780488	1350 DRIVESHAFT ASSY 1-1/4" x 1-3/8"	1
10	780496	1350 DRIVE SHAFT ASSY 1-3/8" x 1-3/8"	1

920-18 HYDRAULIC SCHEMATIC

Engine Mounted Pump (Mainly prior to 2014)

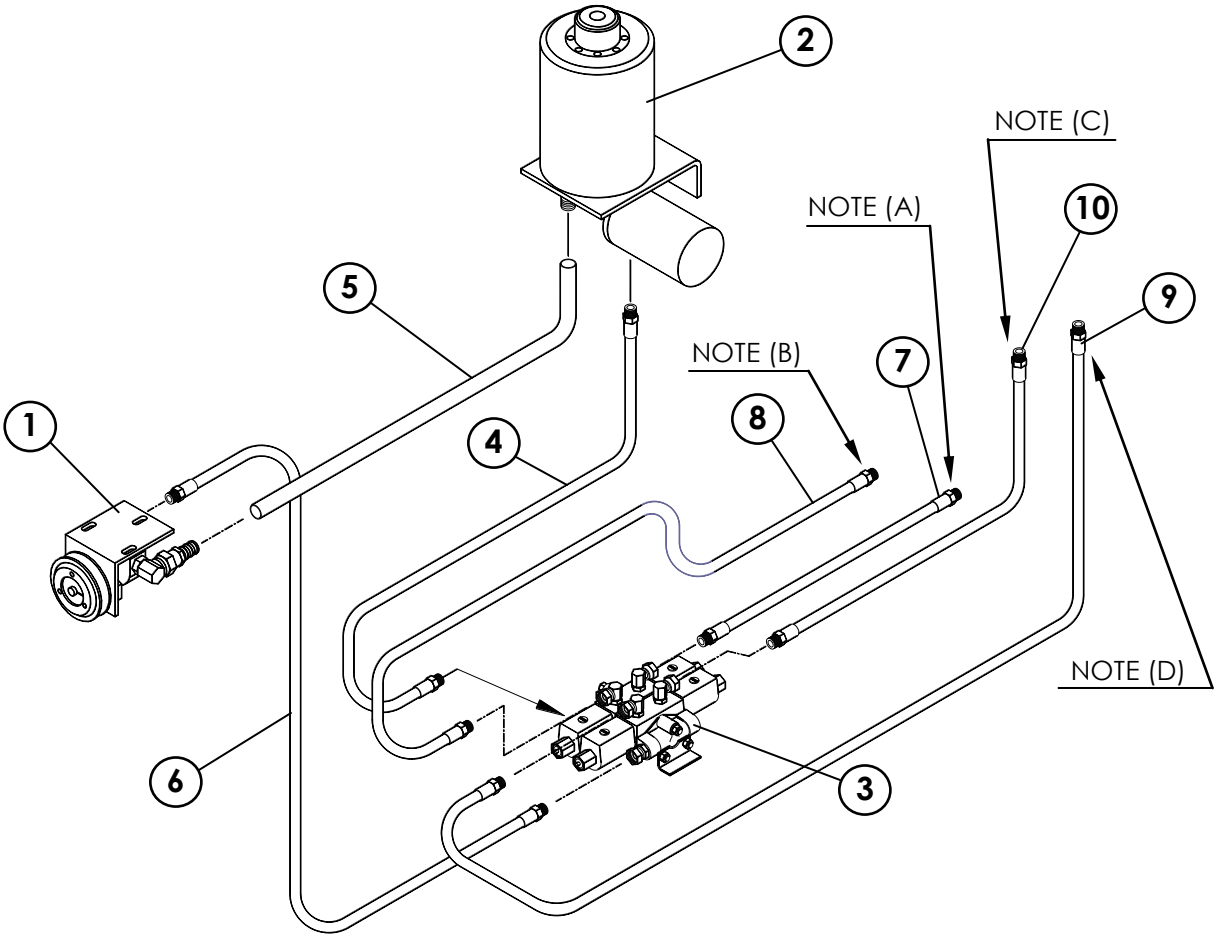

NOTE A: CONNECT TO SPOUT CYLINDER BASE

NOTE B: CONNECT TO SPOUT CYLINDER ROD END

NOTE C: CONNECT TO DOOR CYLINDER BASE

NOTE D: CONNECT TO DOOR CYLINDER ROD END

ITEM #	PART #	DESCRIPTION	QTY
1	780064	HYDRAULIC PUMP ASSEMBLY	1
2	780205	RESERVOIR ASSEMBLY	1
3	780123	HYDRAULIC VALVE ASSEMBLY	1
4	781059	HYD. HOSE ASSY. 3/8" x 20" w/3/8" MP ENDS	1
5	184291	HYD. HOSE ASSY. 3/4" x 144" (SUCTION LINE)	1
6	781073	HYD. HOSE ASSY. 3/8" x 144" w/3/8" MP ENDS	1
7	781066	HYD. HOSE ASSY. w/3/8" MP & 1/4" MP ENDS	1
8	781069	HYD. HOSE ASSY. w/3/8" MP & 1/4" MP ENDS	1
9	781061	HYD. HOSE ASSY. w/3/8" MP ENDS	1
10	781098	HYD. HOSE ASSY. w/3/8" MP ENDS	1

920-18 DOUBLE HYDRAULIC VALVE
#780123

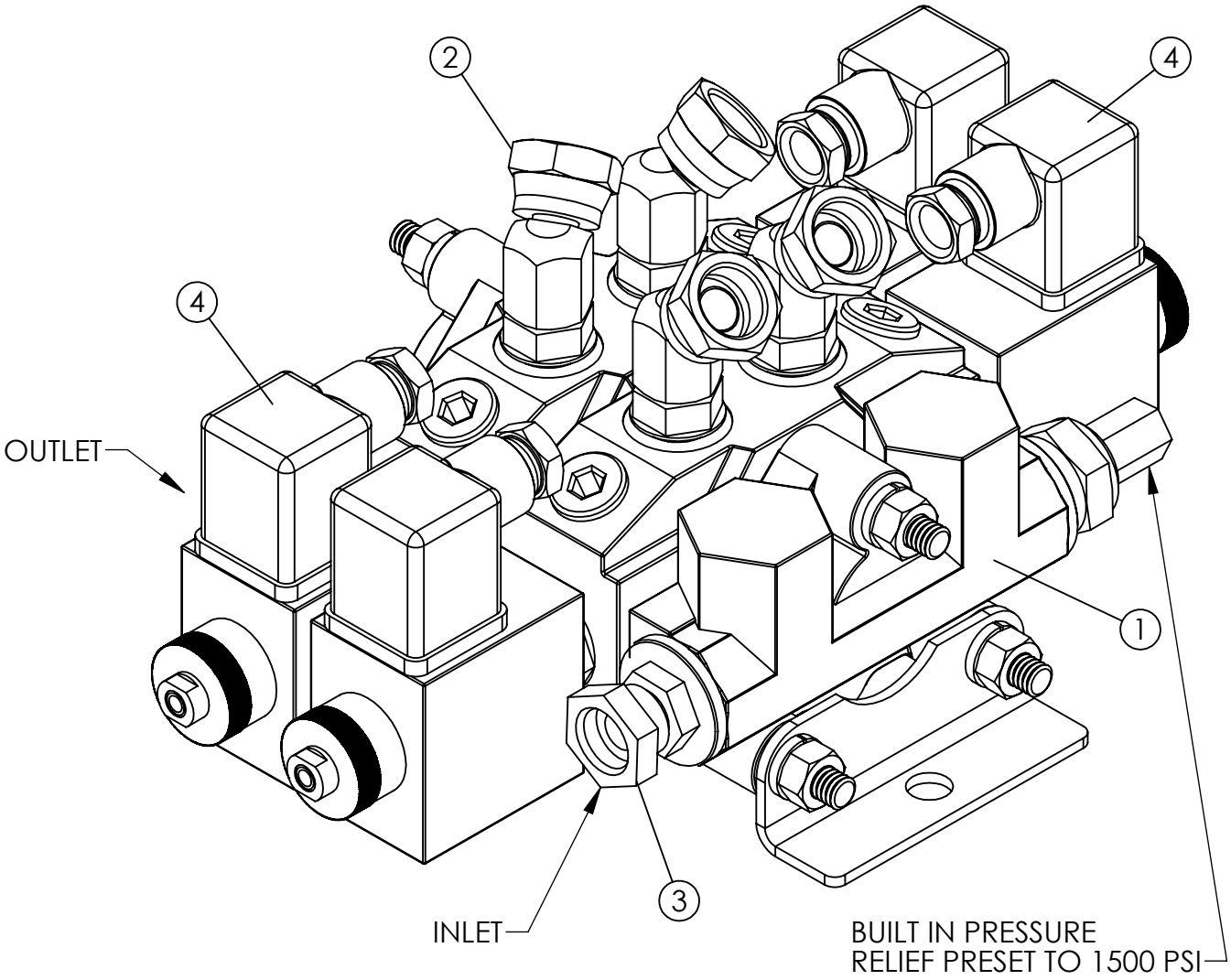

ITEM #	PART #	DESCRIPTION	QTY.
1	362209	HYD VALVE 12V DOUBLE, BUCHER	1
2	368024	HYD SWIVEL 9/16"MOR x 3/8"FPS 45°	4
3	368115	STRAIGHT ADAPTER 9/16 MOR x 3/8 FPS	2
4	453146	DIN CONNECTOR	4

HYDRAULIC PUMP, TRUCK (780064)
(Mounted on Engine)

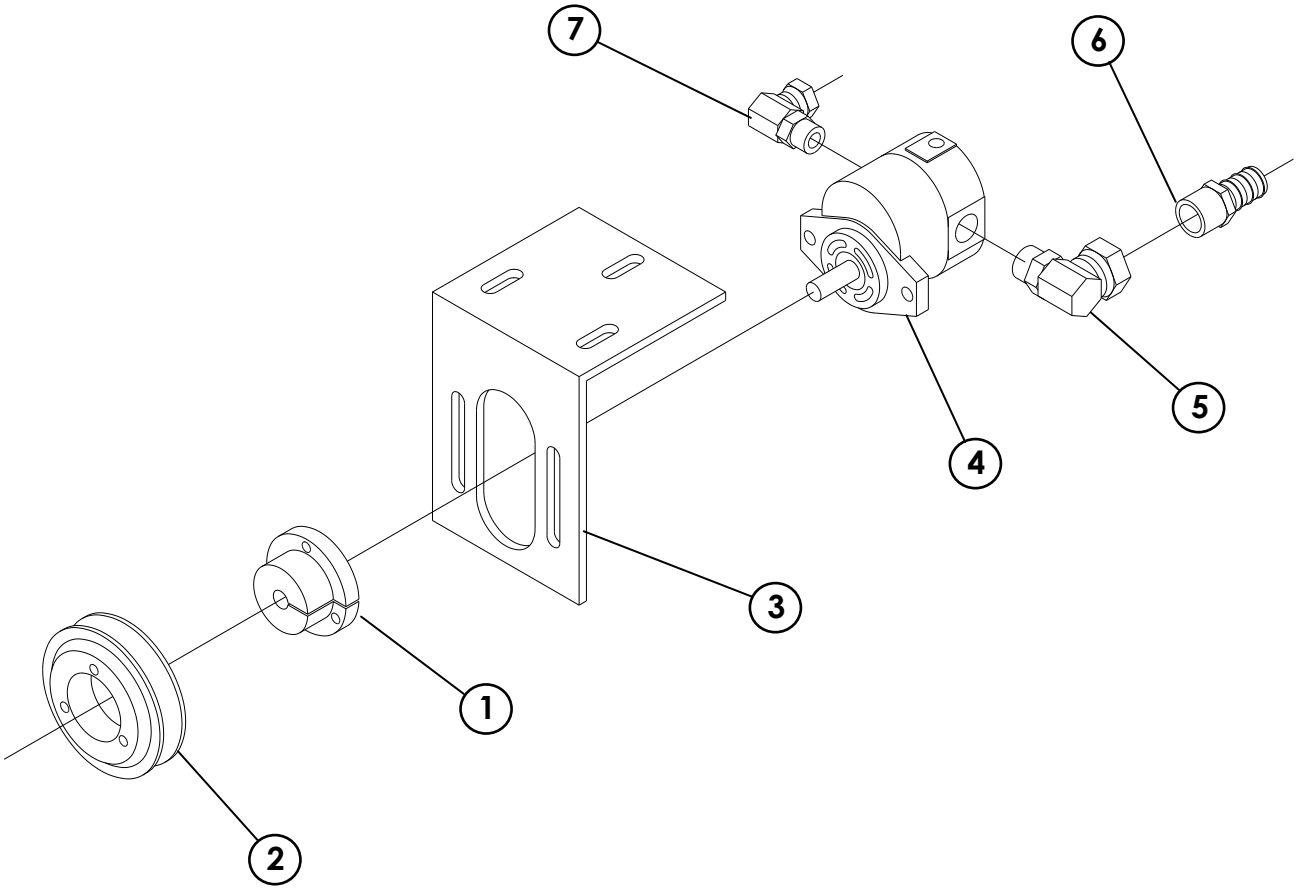

ITEM #	PART #	DESCRIPTION	QTY
1	336008	BUSHING, SH1/2" QD	1
2	324040	SHEAVE, 1B 4.0" V-BELT	1
3	189053	HYDRAULIC PUMP BRACKET	1
4	362017	HYDRAULIC PUMP (D17AA2A)	1
5	368050	FITTING, 7/8" MOR x 3/4" FPSW 90°	1
6	368512	FITTING, 3/4" MP x 3/4" PUSH LOCK BARB	1
7	368040	FITTING, 3/4" MOR x 3/8" FPSW 90°	1

920-18 OIL RESERVOIR ASSEMBLY (780205)

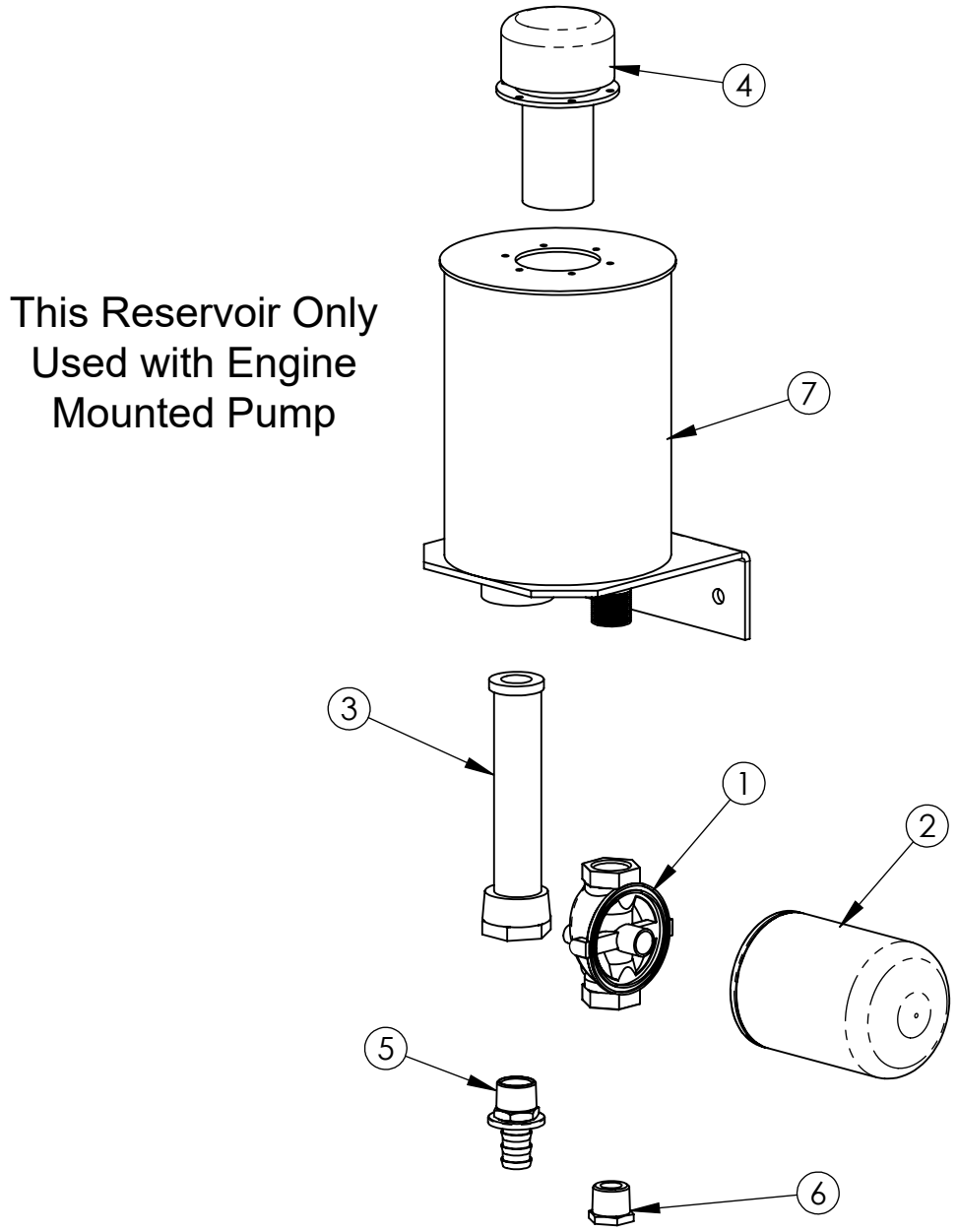

ITEM #	PART #	DESCRIPTION	QTY.
1	362403	FILTER HEAD 3/4", ZAF-07-25-0	1
2	362440	FILTER ELEMENT - AE-10	1
3	362504	SUCTION SCREEN	1
4	362550	FILLER CAP ASSY. FLOE EZY - AB1000-3	1
5	368512	PUSH LOCK HOSE BARB (3/4)x 3/4" MP	1
6	368612	STEEL BUSHING 3/4" MP to 3/8" FP	1
7	870477	OIL RESERVOIR W.A.	1

920-18 TRUCK HYDROSTAT ELECTRIC DISPLACEMENT CONTROL & MANUAL CONTROL ENGINE DRIVEN PUMP

JUNCTION BOX WAS REPLACED BY WIRING HARNESS P/N 358444 IN NOVEMBER 2016.

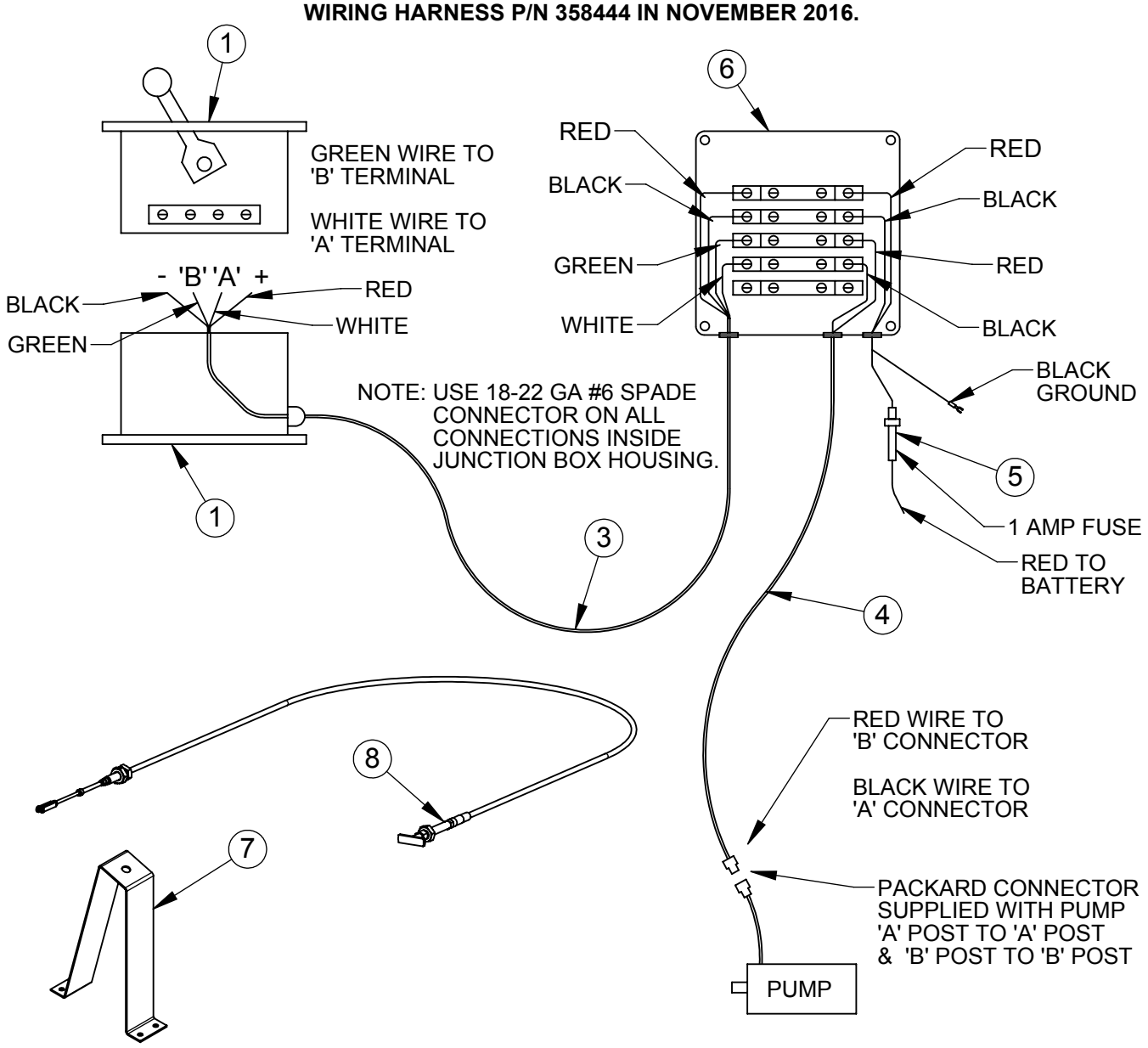

ITEM #	PART #	DESCRIPTION	QTY
1	357710	MECHANICAL CONTROL HANDLE	1
2	358235	SPADE CONNECTOR 18-22 GA #6	8
3	453326	ELECTRICAL WIRE 1174C - 22 GA	4 FT
4	453314	ELECTRICAL WIRE 1172 - 22 GA	15 FT
5	455122	INLINE FUSE HOLDER	1
6	453717	JUNCTION BOX SHELL JB 2010	1
7	189267	T-LOCK CABLE BRACKET	1
8	370304	T-LOCK CABLE WITH 1/4" CLEVIS 10'	1

920-18 DISCHARGE DOOR ASSEMBLY

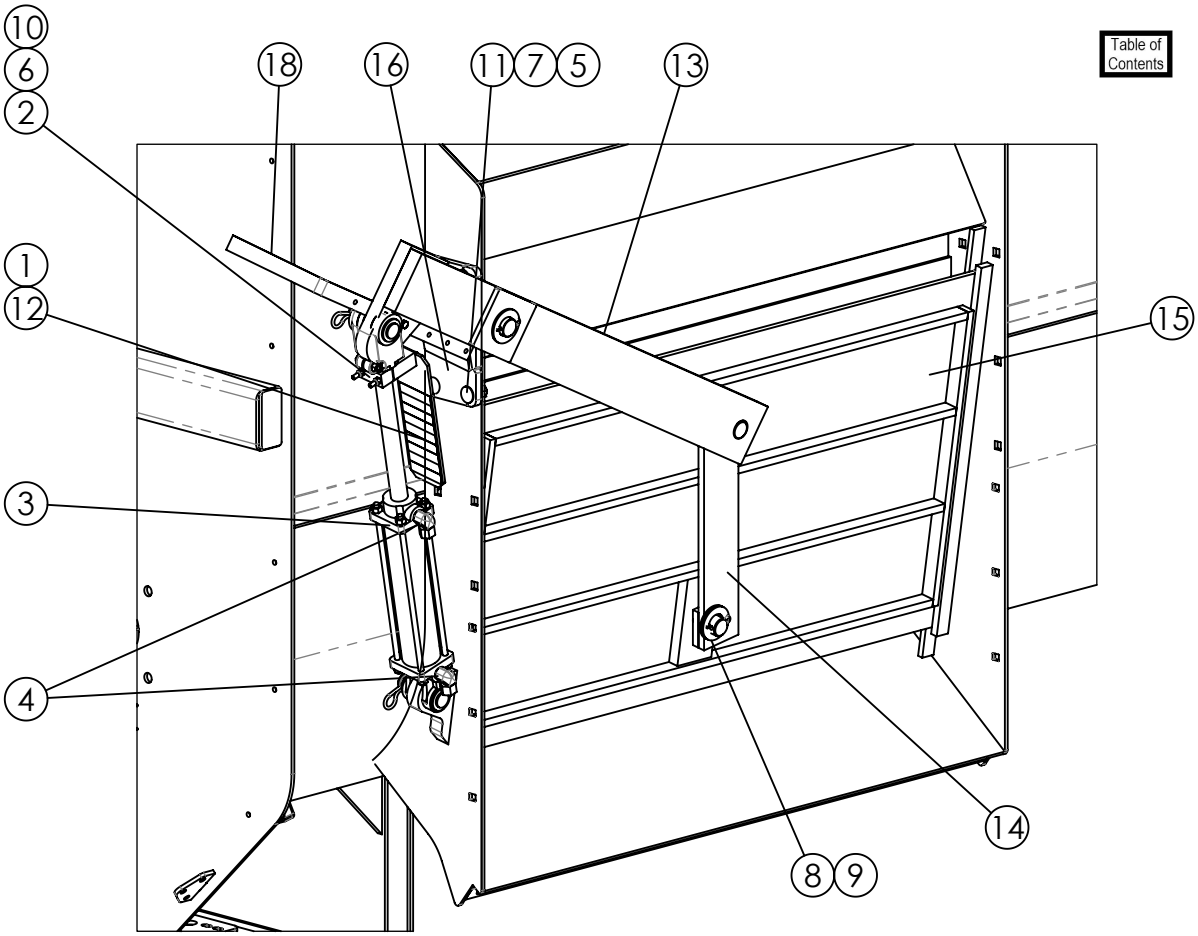

Table of Contents

ITEM #	PART #	DESCRIPTION	QTY.
1	184259	DOOR CYL MARKER PLATE 10"	1
2	184267	CLAMP, DOOR CYLINDER MARKER 3"	1
3	364055	HYDRAULIC CYLINDER ASSY 2" x 8"	1
4	368007	HYD ADAPTER 3/8MP x 3/8FPX 90º .109 ORIFICE	2
5	400208	HEX NUT 1/2"-13 #5 PLTD	4
6	401104	HEX NUT, NYLOC 1/4"-20 #5 PLTD	2
7	402008	SPRING LOCK WASHER 1/2" PLTD	4
8	402518	1-1/8" SAE Flat Washer Pltd	4
9	404000	COTTER PIN 1/4" x 1 1/2"	3
10	405616	HHCS 1/4"-20 x 4" #5 PLTD	2
11	407102	CHCS 1/2"-13 x 1-1/2" #5 PLTD	4
12	440850	DECAL, DOOR INDICATOR 7" x 3" (Used with Truck Unit)	1
13	872247	STRAIGHT DOOR LEVER ARM WA	1
14	872248	STRAIGHT DOOR ARM W.A.	1
15	872328	3/8" STRAIGHT DOOR PLATE WA	1
16	873142	PIVOT PIN PLATE WA (Starting with Serial No. 411260736)	1
	872258	PIVOT PIN PLATE WA (Prior to Serial No. 411260736)	1
18	187298	TRAILER DOOR MARKER (Used with Trailer Unit)	1

SPOUT ASSEMBLY

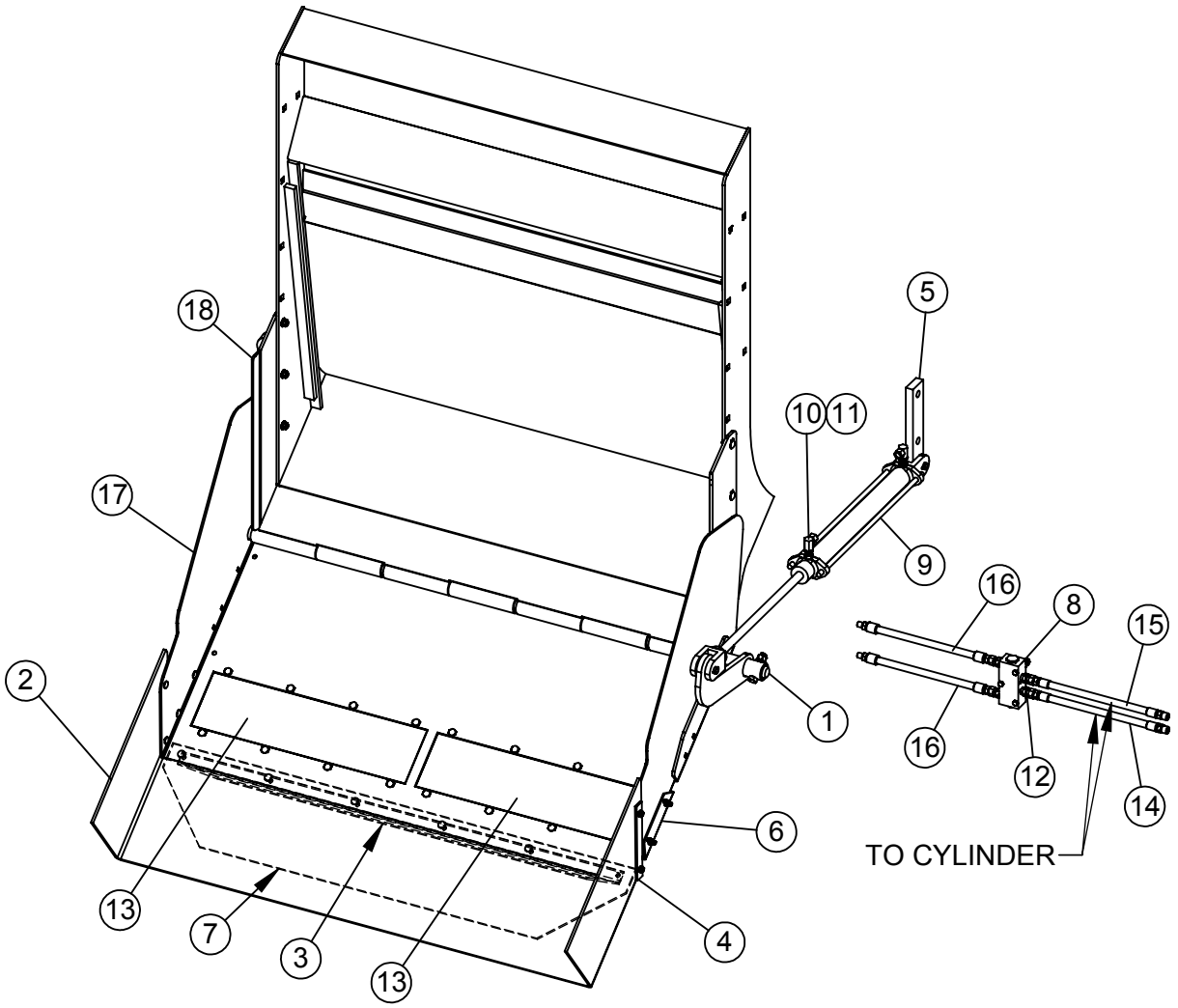

ITEM #	PART #	DESCRIPTION	QTY.
1	182238	SPOUT SHAFT	1
2	183145	SPOUT RUBBER 16" x 64"	1
3	183152	SPOUT BACKUP ANGLE, 47"	1
4	183160	SPOUT RUBBER SIDE BAR x 8"	2
5	185896	SPOUT CYLINDER BAR - 9-1/2	1
6	189079	SPOUT MAGNET GUARD, 24" XD	1
7	192118P	SPOUT RUBBER SUPPORT	1
8	362219	DOUBLE PILOT OPERATED CHECK VALVE, 3/8" NPT PORTS	1
9	364040	HYD. CYL. 25-1/4 CC 1 1/2" x 16"	1
10	368010	90° 1/4MP x 1/4" FP SWVL ORF 1/8	2
11	368106	STR. 9/16"MOR x 1/4"FP SWIVEL	2
12	368110	HYD ADAPTER, STRAIGHT 3/8MP x 3/8FP SWIVEL	4
13	375005	ACRO PLATE MAGNET AM 2200,	2
14	781918	HOSE ASM, 3/8" x 17", 3/8MP x 3/8MP	1
15	781919	HOSE ASM, 3/8" x 18", 3/8MP x 3/8MP	1
16	781920	HOSE ASM, HYD 3/8" x 66", 3/8MP x 1/4MP	2
17	872284	24" SPOUT WA (SHOWN)	1
	872283	14" SPOUT WA (NOT SHOWN)	1
18	873261	SPOUT HINGE W.A. 620 XD	1

WIDE DISCHARGE DOOR & LEVER ARM ASSEMBLY

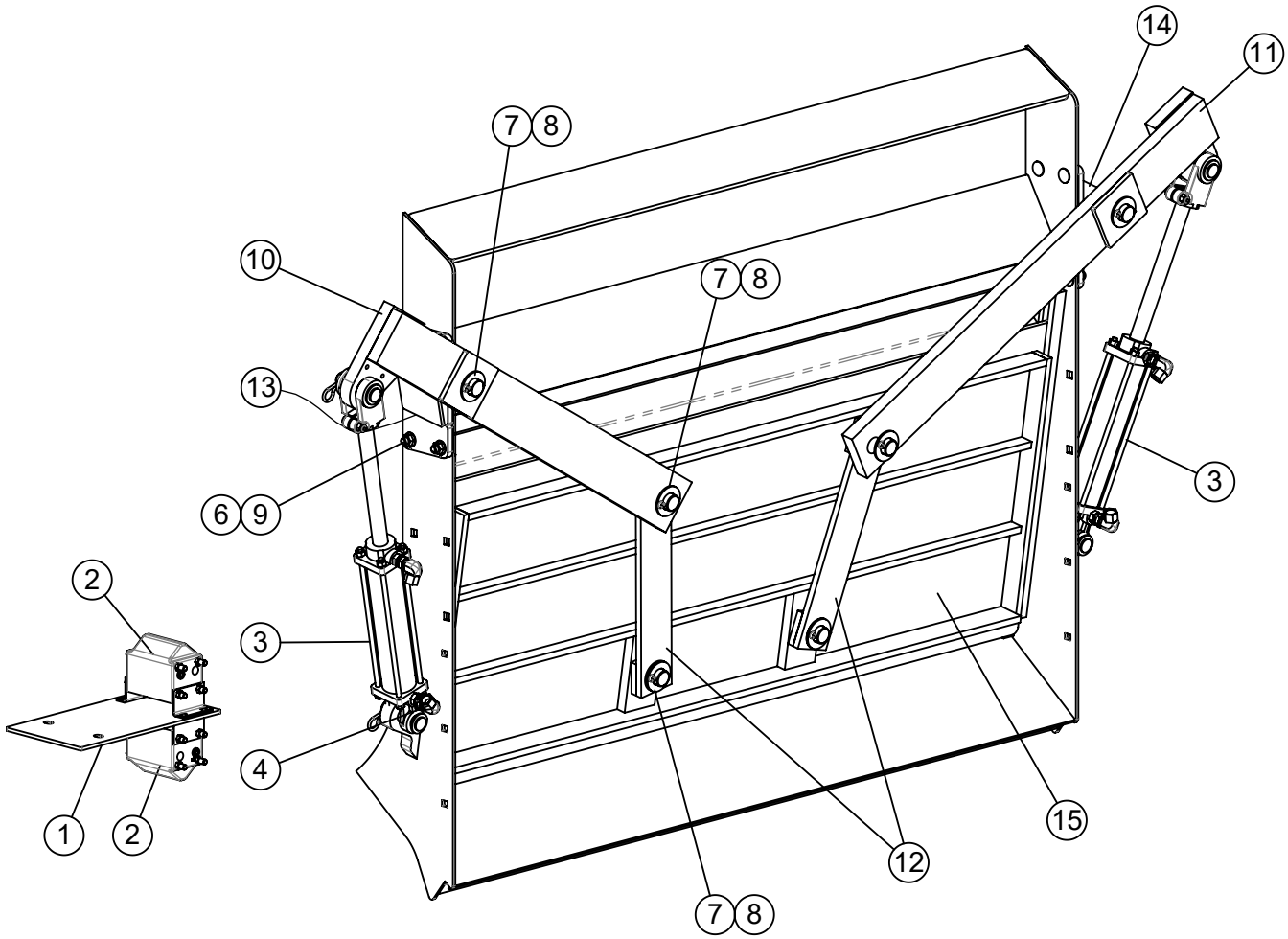

ITEM #	PART #	DESCRIPTION	QTY.
1	192430	120 V HYD. VALVE/DIVIDER BRACKET	1
2	362413	HYD FLOW DIVIDER, 50/50 GEAR 9.5 GPM	2
3	364055	HYD CYL 2" x 8" 20-1/4" CL	2
4	368007	HYD ADAPTER 3/8MP x 3/8FPX 90º .109 ORIFICE	4
5	368115	STRAIGHT ADAPTER 9/16 MOR x 3/8 FPS	4
6	400114	HEX NUT, 1/2-13 SERRATED FLANGE #5	8
7	402518	1-1/8" SAE Flat Washer Pltd	8
8	404000	COTTER PIN 1/4" x 1 1/2"	6
9	407102	CHCS 1/2"-13 x 1-1/2" #5 PLTD	8
10	872247	STRAIGHT DOOR LEVER ARM WA	1
11	872247RH	RH STRAIGHT DOOR LEVER ARM W.A.	1
12	872248	STRAIGHT DOOR ARM W.A.	2
13	873142	PIVOT PIN PLATE WA	1
14	873142RH	PIVOT PIN PLATE WA	1
15	873302	3/8" STRAIGHT DOOR PLATE WA LARGE DOOR, 61-3/4"	1

920-18 WIDE DOOR SPOUT ASSEMBLY

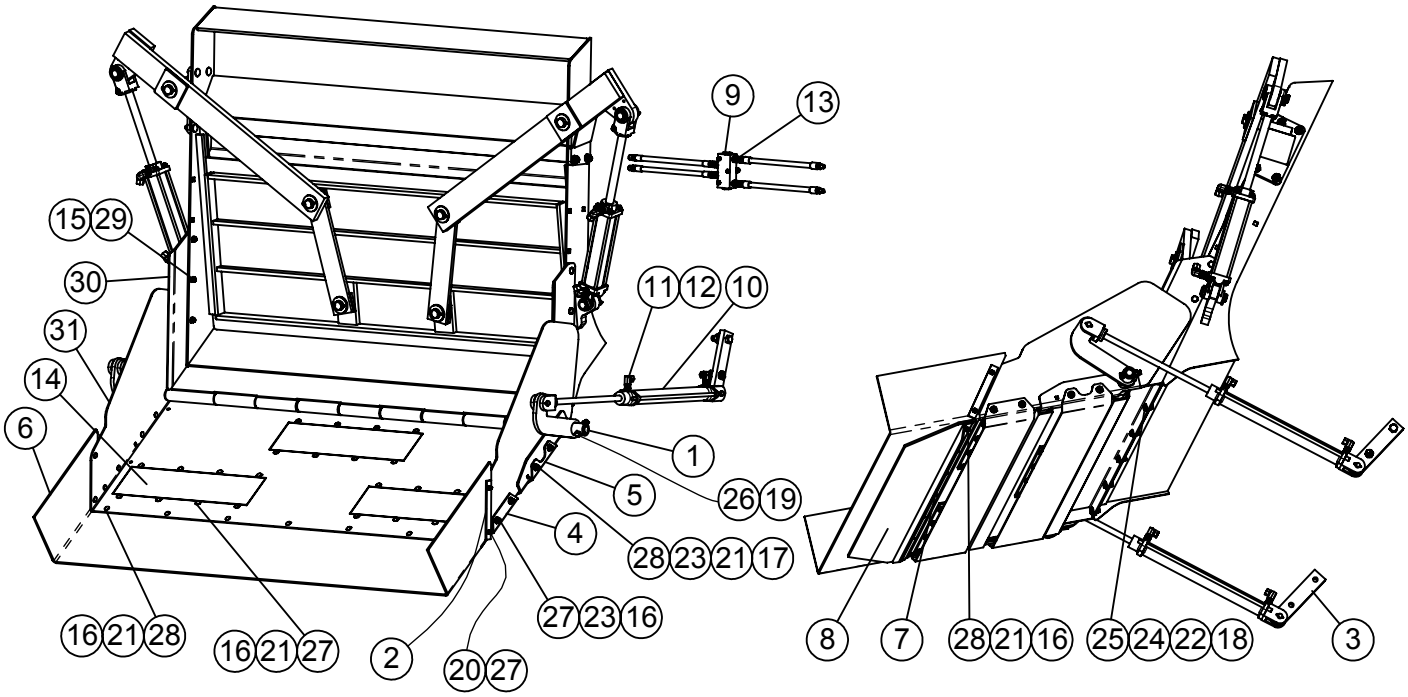

ITEM #	PART #	DESCRIPTION	
1	182239	SHAFT, SPOUT, WIDE DOOR	1
2	183160	SPOUT RUBBER SIDE BAR x 8"	2
3	185896	SPOUT CYLINDER BAR - 9-1/2	2
4	192258	SPOUT MAGNET GUARD,	1
5	192258L	SPOUT MAGNET GUARD, 24" XD	1
6	192259	SPOUT RUBBER	1
7	192262	SPOUT BACKUP ANGLE, 47"	1
8	192264	SPOUT RUBBER SUPPORT (540/920)	1
9	362219	DOUBLE PILOT OPERATED CHECK VALVE, 3/8" NPT PORTS	1
10	364040	HYD. CYL. 25-1/4 CC 1 1/2" x 16"	2
11	368010	90° 1/4MP x 1/4" FP SWVL ORF 1/8	4
12	368106	HYD FITTING, STR 9/16"MOR x 1/4"FP SWIVEL	4
13	368110	HYD ADAPTER, STRAIGHT 3/8MP x 3/8FP SWIVEL	4
14	375005	ACRO PLATE MAGNET AM 2200,	3
15	400107	HEX NUT, 3/8"-16 SERRATED FLANGE #5	6
16	400205	HEX NUT 5/16"-18 #5 PLTD	35
17	400205	HEX NUT 5/16"-18 #5 PLTD	4
18	400206	HEX NUT 3/8"-16 #5 PLTD	6
19	400208	HEX NUT 1/2"-13 #5 PLTD	2
20	400905	HEX CROWN LOCNUT 5/16"-18 G5 PLT	4
21	402005	WASHER 5/16", SPRING LOCK, MED PLTD	39
22	402006	WASHER SPRING LOCK 3/8" MED PLTD	6
23	402405	FLAT WASHER MED PLTD 5/16"	8
24	402406	FLAT WASHER 3/8" PLTD	6
25	405653	HHCS 3/8"-16 x 1" #5 PLTD	6
26	405707	HHCS 1/2"-13 x 2-1/2" #5 PLTD	2
27	407021	CHCS 5/16"-18 x 1" #5 PLTD	32
28	407022	CHCS 5/16"-18 x 1-1/4"	11
29	407040	CHCS 3/8"-16 x 1" #5 PLTD	6
30	873300	SPOUT HINGE WA-LARGE DOOR	1
31	873301	SPOUT WA 64"	1

920-18 SQUARE DRIVE TOP AUGER ASSEMBLIES (AFTER SERIAL #420532531)

Table of Contents

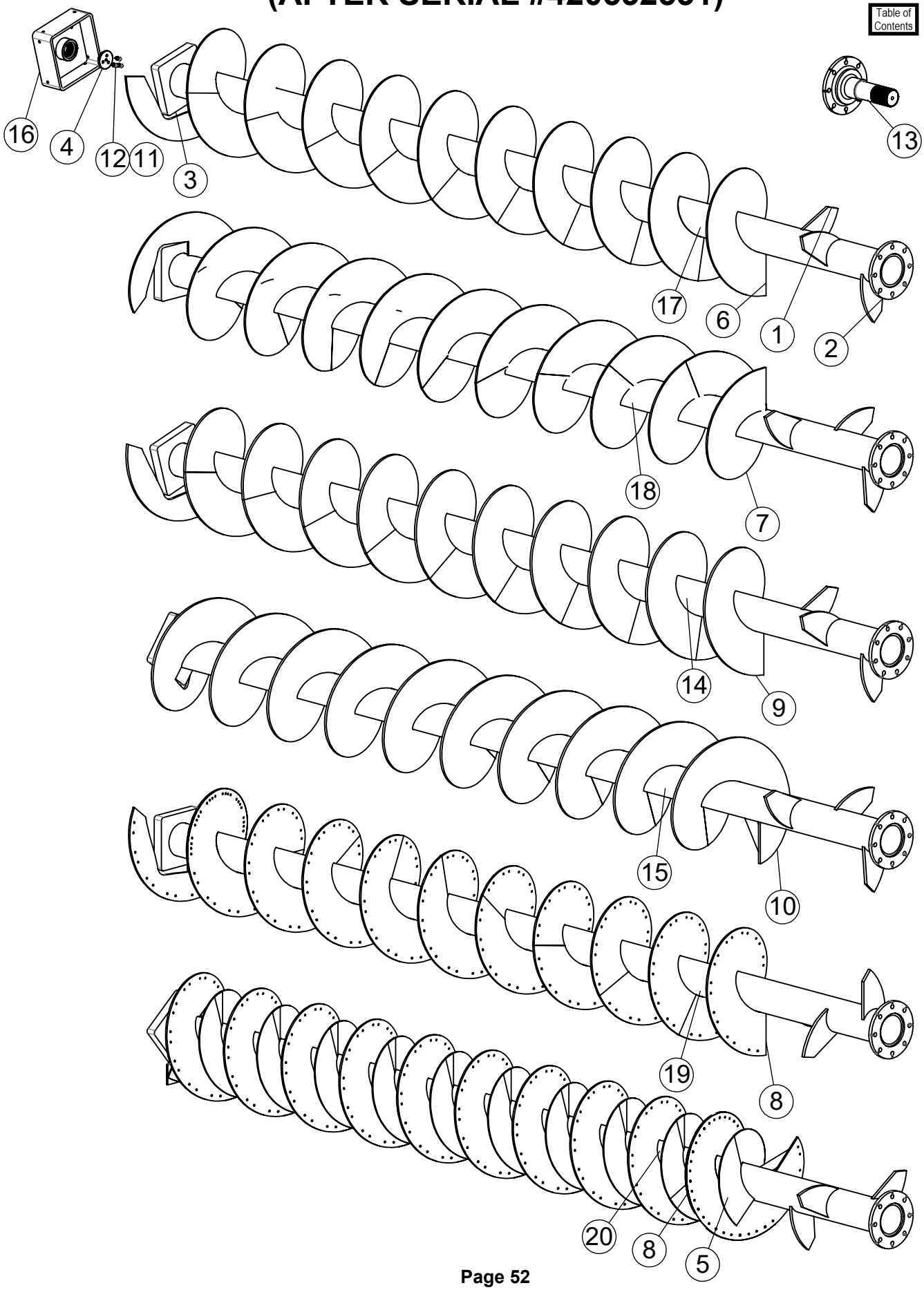

920-18 SQUARE DRIVE TOP AUGER ASSEMBLIES (AFTER SERIAL #420532531)

ITEM #	PART #	DESCRIPTION	QTY.
1	185708	24" TOP AUGER PADDLE - 6" x 9 5/8"	3
2	190368	TOP AUGER FLANGE	1
3	192783	AUGER DRIVE SQUARE LARGE PLATE" 920	1
4	344319	SHAFT COVER RDF090	1
5	382045M	FLIGHT 20"OD x 6 5/8"ID x 1/4" x 16"P RH	10
6	382424M	FLIGHT 24"OD x 6 5/8"ID x 3/8" RH 2/3 PITCH	10
7	382425M	FLIGHT 24"OD x 6-5/8"ID x 3/8" LH 2/3 PITCH	10
8	382428M	FLIGHT 24"OD x 6-5/8"ID x 3/8" RH 16" PITCH	10
9	382430M	FLIGHT 24"OD x 6-5/8"ID x 1/2" RH 2/3 PITCH	10
10	382431M	FLIGHT 24"OD x 6-5/8"ID x 1/2" LH 2/3 PITCH	10
11	402506	FLAT WASHER 3/8" SAE PLTD	3
12	406053	HHCS 3/8"-24 x 1" #5 PLTD	3
13	872579	920 TOP AUGER FLANGE, 3-1/2" SPLINE	1
14	873423	SQ 920 HVY 24" TOP AUGER WA	1
15	873423RH	920 HVY 24" TOP AUGER SQ WA RH DISCHARGE	1
16	873442	DR FLANGE WA, (SQUARE) 1220 TOP AUGER	1
17	874226	920 24" TOP AUGER WA SQR DRIVE	1
18	874226RH	920 24" TOP AUGER SQ DR WA RH DISCHARGE	1
19	874227	920 24" TOP AUGER WA W/HOLES SQR DRIVE	1
20	874228	920 24" TOP AUGER DOUBLE FLIGHT SQ DR WA w/Holes	1

24" TOP AUGER ASSEMBLIES
(AFTER SERIAL #400977360 TO #420532531)

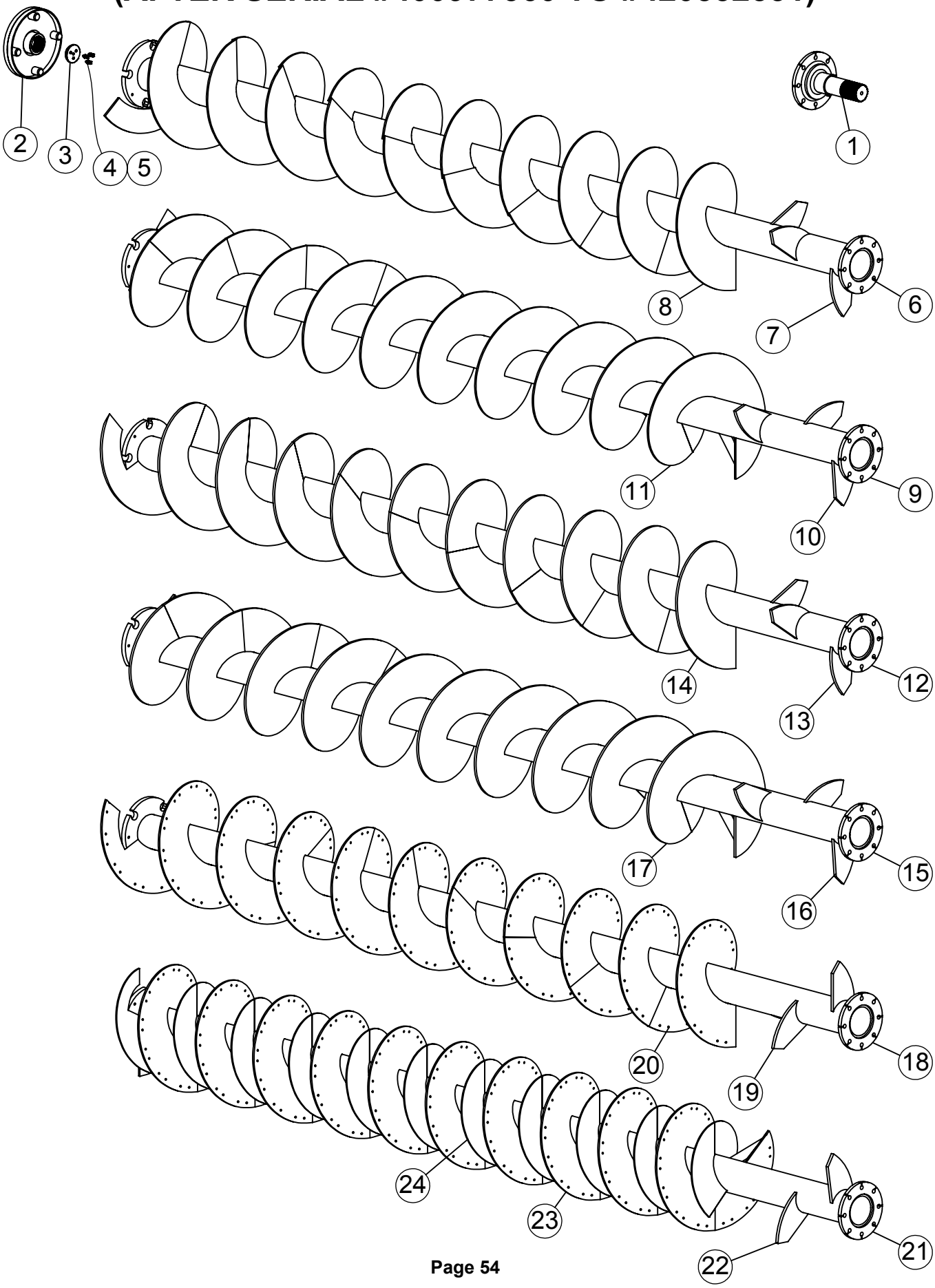

24" TOP AUGER ASSEMBLIES
(AFTER SERIAL #400977360 TO #420532531)

ITEM #	PART #	DESCRIPTION	QTY.
1	872579	920 TOP AUGER FLANGE, 3-1/2" SPLINE	1
2	872911	AUGER 14" DR FLANGE WA	1
3	344319	SHAFT COVER RDF090	1
4	402506	FLAT WASHER 3/8" SAE PLTD	3
5	406053	HHCS 3/8"-24 x 1" #5 PLTD	3

ITEM #	PART #	DESCRIPTION	QTY.
6	872912	920 24" TOP AUGER WA	1
7	185708	24" TOP AUGER PADDLE - 6" x 9 5/8"	3
8	382424	FLIGHT 24"OD x 6 5/8"ID x 3/8" RH 2/3 PITCH	10

ITEM #	PART #	DESCRIPTION	QTY.
9	872912RH	920 24" TOP AUGER WA RH DISCHARGE	1
10	185708	24" TOP AUGER PADDLE - 6" x 9 5/8"	3
11	382425	FLIGHT 24"OD x 6-5/8"ID x 3/8" LH 2/3 PITCH	10

ITEM #	PART #	DESCRIPTION	QTY.
12	872913	920 HVY 24" TOP AUGER WA	1
13	185708	24" TOP AUGER PADDLE - 6" x 9 5/8"	3
14	382430	FLIGHT 24"OD x 6-5/8"ID x 1/2" RH 2/3 PITCH	10

ITEM #	PART #	DESCRIPTION	QTY.
15	872913RH	920 HVY 24" TOP AUGER WA RH DISCHARGE	1
16	185708	24" TOP AUGER PADDLE - 6" x 9 5/8"	3
17	382431	FLIGHT 24"OD x 6-5/8"ID x 1/2" LH 2/3 PITCH	10

ITEM #	PART #	DESCRIPTION	QTY.
18	874201	920 24" TOP AUGER WA, WITH KNIFE HOLES	1
19	185708	24" TOP AUGER PADDLE - 6" x 9 5/8"	3
20	382428	FLIGHT 24"OD x 6-5/8"ID x 3/8" RH 2/3 PITCH	10

ITEM #	PART #	DESCRIPTION	QTY.
21	874209	920 24" TOP AUGER DOUBLE FLIGHT WA w/Holes	1
22	185708	24" TOP AUGER PADDLE - 6" x 9 5/8"	3
23	382428	FLIGHT 24"OD x 6-5/8"ID x 3/8" RH 16" PITCH	10
24	382045	FLIGHT 20"OD x 6 5/8"ID x 1/4" x 16"P RH	10

20" TOP AUGER ASSEMBLIES (BEFORE SERIAL #400977360)

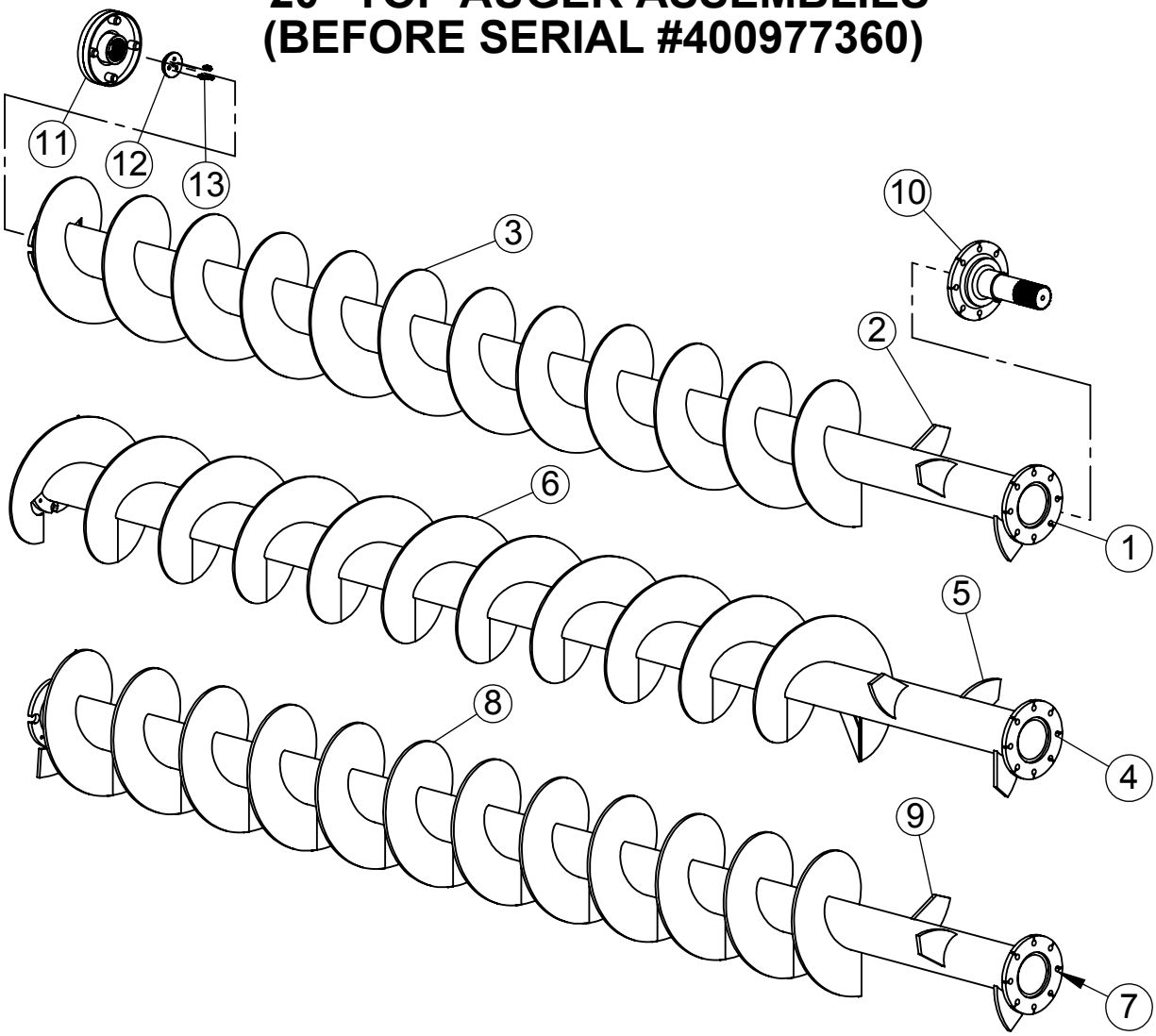

ITEM #	PART #	DESCRIPTION	QTY
1	872589	920 TOP AUGER 20" x 3/8", LH DISCHARGE	1
2	185618	20" TOP AUG PADDLE -5" x 7 3/4"	3
3	382026	20" OD x 6 5/8" ID x 3/8" RH FLIGHT 14"P	12

ITEM #	PART #	DESCRIPTION	QTY
4	872589RH	920 TOP AUGER 20" x 3/8", RH DISCHARGE	1
5	185618	20" TOP AUG PADDLE -5" x 7 3/4"	3
6	382027	20" OD x 6-5/8" ID x 3/8" LH FLIGHT 14"P	11

ITEM #	PART #	DESCRIPTION	QTY
7	872732	920 HVY TOP AUGER 20" x 1/2", LH, 1/2 REVERSE	1
8	382048	20"O.D. x 6 5/8"I.D. x 1/2" RH 14" PITCH FLIGHT	12
9	185618	20" TOP AUG PADDLE -5" x 7 3/4"	3

ITEM #	PART #	DESCRIPTION	QTY
10	872579	920 TOP AUGER FLANGE, 3-1/2" SPLINE	1

ITEM #	PART #	DESCRIPTION	QTY
11	872587	920 TOP AUGER DRIVE FLANGE	1

ITEM #	PART #	DESCRIPTION	QTY
12	344319	SHAFT COVER RDF090	1
13	406053	HHCS 3/8"-24 x 1" #5 PLTD	3

920-18 TOP AUGER GEARBOX

920-18 STATIONARY
Auburn Gearbox

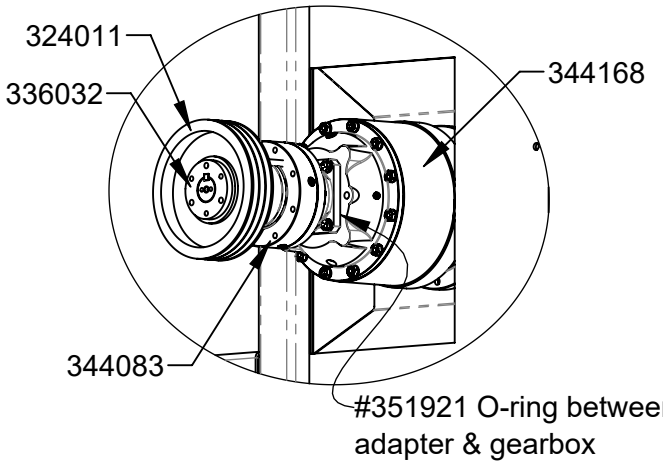

920-18 STATIONARY
Brevini Gearbox

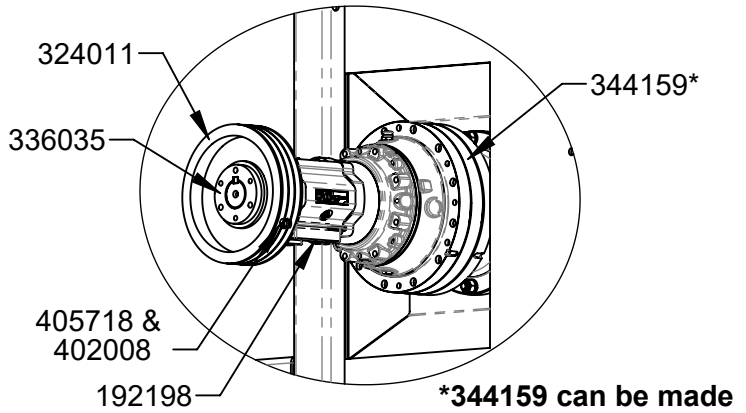

***344159 can be made from 344161 & 344238**

920-18 TRUCK
Auburn Gearbox

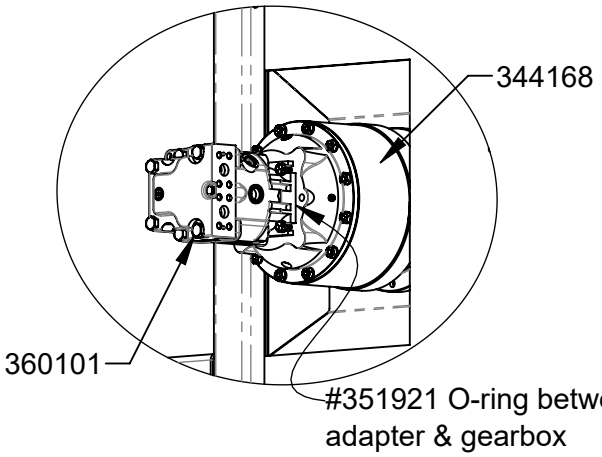

920-18 TRUCK
Brevini Gearbox

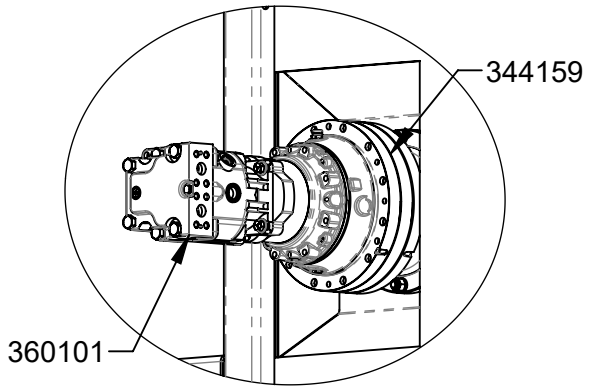

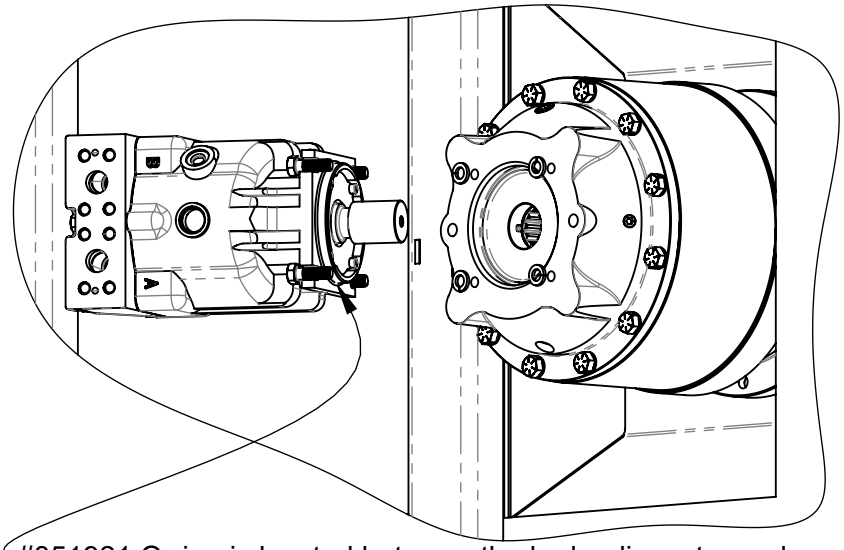

#351921 O-ring is located between the hydraulic motor and the Auburn gearbox on truck units and between the overhung load adapter and the Auburn gearbox on stationary units, (see illlustration at top left for Stationary application).

920-18 BOTTOM AUGER ASSEMBLIES

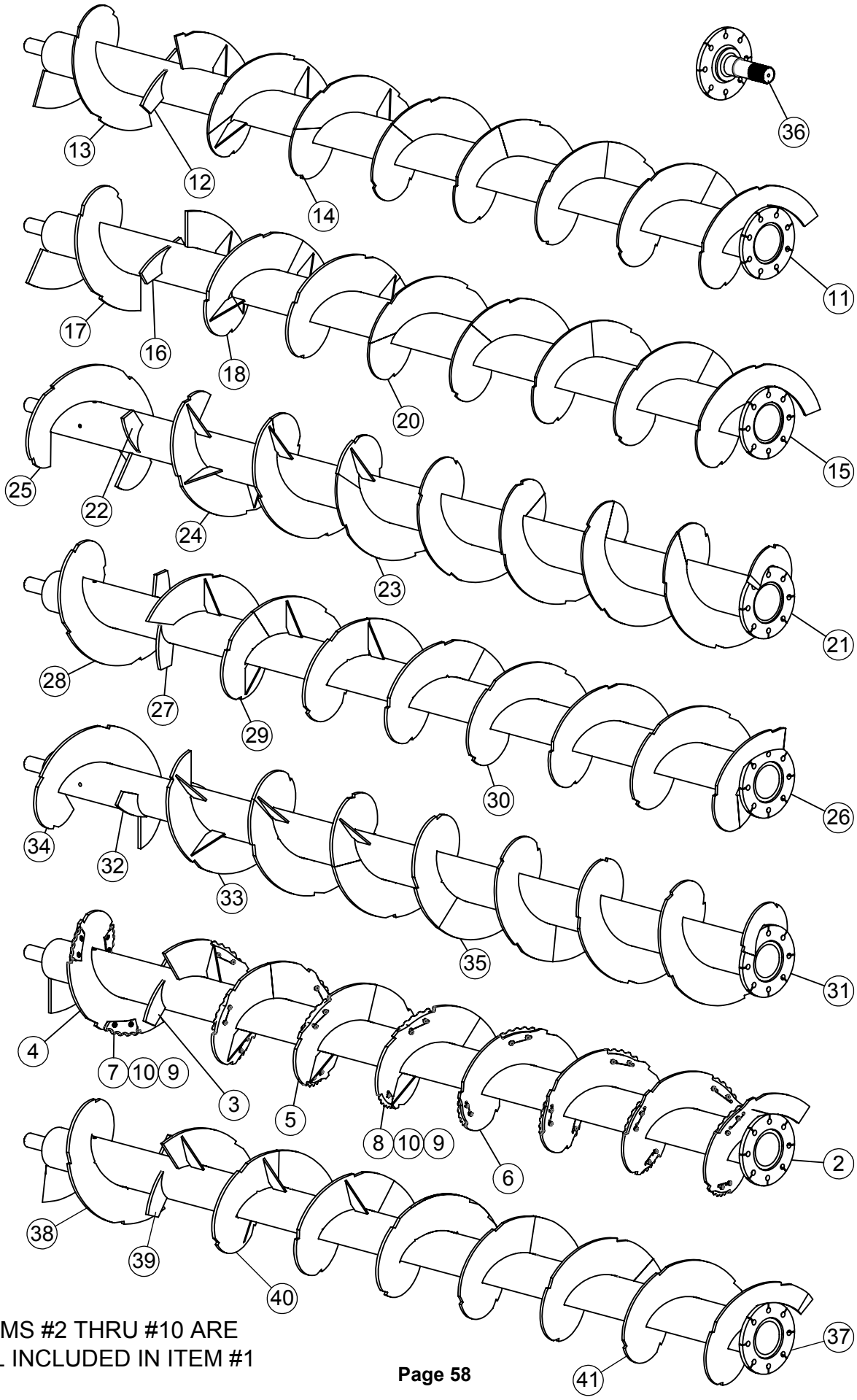

ITEMS #2 THRU #10 ARE
ALL INCLUDED IN ITEM #1

920-18 BOTTOM AUGER ASSEMBLIES

ITEM #	PART #	DESCRIPTION	QTY.
1	686047	920 EXTRA HVY AUGER with HAYPRO KNIFE KIT	1
2	873265	920 EXTRA DUTY BTM AUG (HPRO NOTCHES)	1
3	189269	24" AUGER KICKER 4-7/16" x 9-7/16"	2
4	382456	24" OD x 8-5/8" ID x 3/4" RH FLIGHT	1
5	382457	24" OD x 8-5/8" ID x 3/4" LH FLIGHT	3
6	382459	24" OD x 8-5/8" ID x 5/8" LH FLIGHT	4
7	385006	AUGER KNIFE 8", LEFT HAND (OPTIONAL PARTS)	3
8	385009	AUGER KNIFE 8", RIGHT HAND (OPTIONAL PARTS)	20
9	407557	SOCKET COUTERSINK HEAD 1/2"-13 x 1-1/2"	46
10	401108	HEX NUT, 1/2"-13 NYLOC #5 PLTD	46

ITEM #	PART #	DESCRIPTION	QTY.
11	872585	920 BTM AUGER 1/2" FLIGHT, LH DISCHARGE	1
12	189269	24" AUGER KICKER 4-7/16" x 9-7/16"	2
13	382426	24"OD x 8 5/8" ID x 1/2" RH FULL PITCH	1
14	382427	24" OD x 8 5/8" ID x 1/2" LH FULL PITCH	7

ITEM #	PART #	DESCRIPTION	QTY.
15	872731	920 BTM AUGER 3/4" FLIGHT, LH DISCHARGE	1
16	189269	24" AUGER KICKER 4-7/16" x 9-7/16"	2
17	382454	24" OD x 8-5/8" ID x 3/4" RH FULL PITCH	1
18	382455	24" OD x 8 5/8" ID x 3/4" LH FULL PITCH	1
19	382455	24" OD x 8 5/8" ID x 3/4" LH FULL PITCH	1
20	382427	24" OD x 8 5/8" ID x 1/2" LH FULL PITCH	5

ITEM #	PART #	DESCRIPTION	QTY.
21	872731RH	920 BTM AUGER 3/4" FLIGHT, RH DISCHARGE	1
22	189269	24" AUGER KICKER 4-7/16" x 9-7/16"	2
23	382426	24"OD x 8 5/8" ID x 1/2" RH FULL PITCH	5
24	382454	24" OD x 8-5/8" ID x 3/4" RH FULL PITCH	2
25	382455	24" OD x 8 5/8" ID x 3/4" LH FULL PITCH	1

ITEM #	PART #	DESCRIPTION	QTY.
26	872735	920 HVY BTM AUGER, 3/4" FLHT, LH DISCH	1
27	189269	24" AUGER KICKER 4-7/16" x 9-7/16"	2
28	382464	24" OD x 8-1/2" ID x 3/4" RH FULL PITCH	1
29	382465	24" OD x 8 1/2" ID x 3/4" LH FULL PITCH	3
30	382467	24" OD x 8 1/2" ID x 5/8" LH FULL PITCH	4

ITEM #	PART #	DESCRIPTION	QTY.
31	872735RH	920 HEAVY BTM AUGER 3/4" FLIGHT, RH DISCH	1
32	189269	24" AUGER KICKER 4-7/16" x 9-7/16"	2
33	382464	24" OD x 8-1/2" ID x 3/4" RH FULL PITCH	3
34	382465	24" OD x 8 1/2" ID x 3/4" LH FULL PITCH	1
35	382466	24" OD x 8 1/2" ID x 5/8" RH FULL PITCH	4

ITEM #	PART #	DESCRIPTION	QTY.
36	873387	BTM AUGER RND DRIVE FLG, 3-1/2" SPLINE	1

ITEM #	PART #	DESCRIPTION	QTY.
37	873288	920 HVY BTM AUG WA, 6" CONVERG, LH DISCH	1
38	382464	24" OD x 8-1/2" ID x 3/4" RH FULL PITCH	1
39	189269	24" AUGER KICKER 4-7/16" x 9-7/16"	2
40	382465	24" OD x 8 1/2" ID x 3/4" LH FULL PITCH	3
41	382467	24" OD x 8 1/2" ID x 5/8" LH FULL PITCH	4

920-18 STAGGERED ROTOR ASSEMBLY

Table of Contents

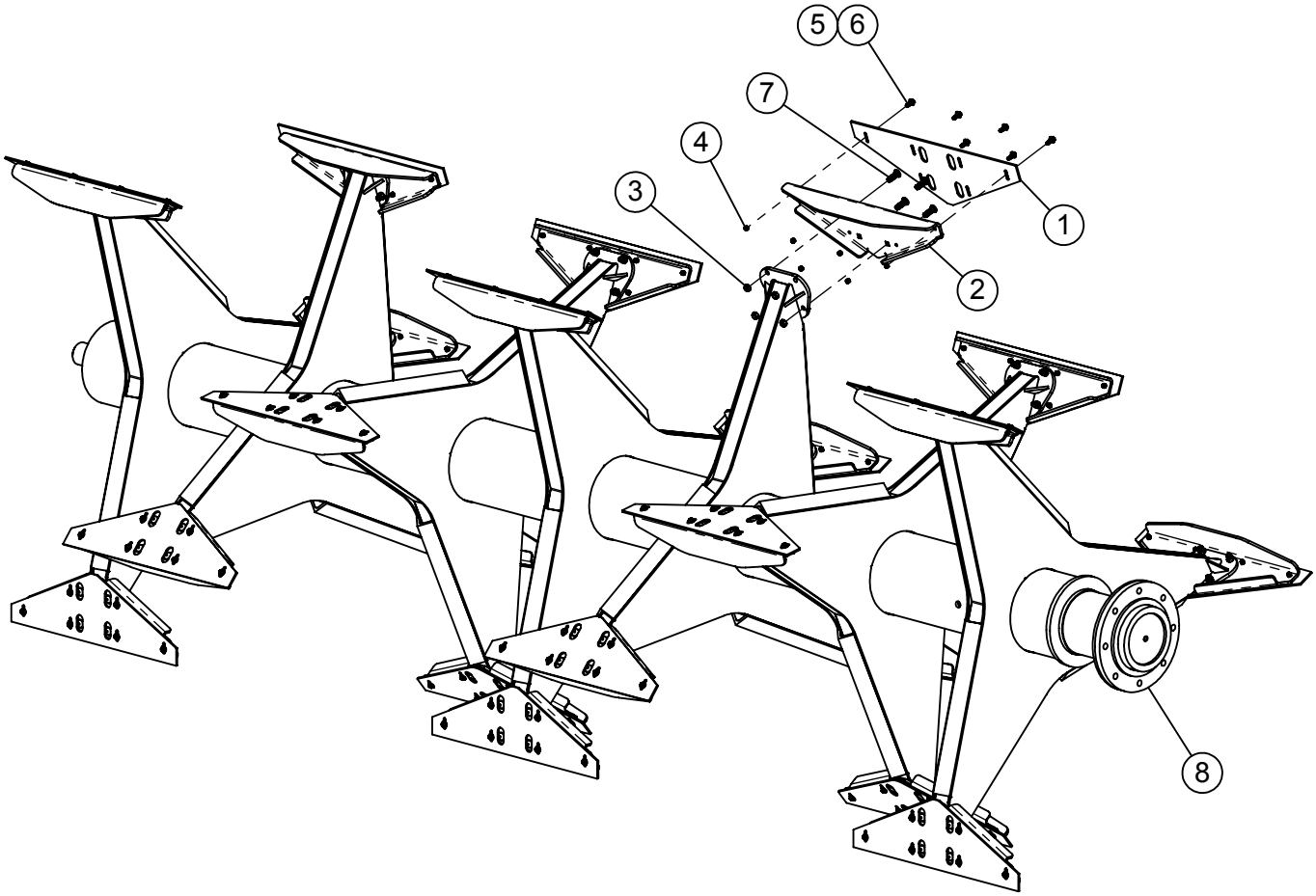

ITEM #	PART #	DESCRIPTION	QTY.
1	190339P	PLASTIC WIPER	21
2	190770	WIPER CHANNEL 5/8 BOLTS	21
3	400910	HEX CROWN LOCNUT 5/8"-11 #9 PLTD	84
4	401106	HEX NUT, 3/8"-16 NYLOC #5 PLTD	126
5	402806	FLAT WASHER 3/8" #9 BOWMALLOY	126
6	406906	HHCS 3/8"-16 x 1-1/4" #9 BOWMALLOY	126
7	407130	CHCS 5/8"-11 x 2" #8 PLTD	84
8	872940	920-18 STAGGERED ROTOR GEN 2	1
	872940RH	920-18 RIGHT HAND STAGGERED ROTOR WA GEN 2	1
	873217	920-18 HEAVY STAGGERED ROTOR GEN2	1
	873217RH	920-18 RIGHT HAND HEAVY STAGGERED ROTOR GEN 2	1

920-18 6-ARM ROTOR ASSEMBLY

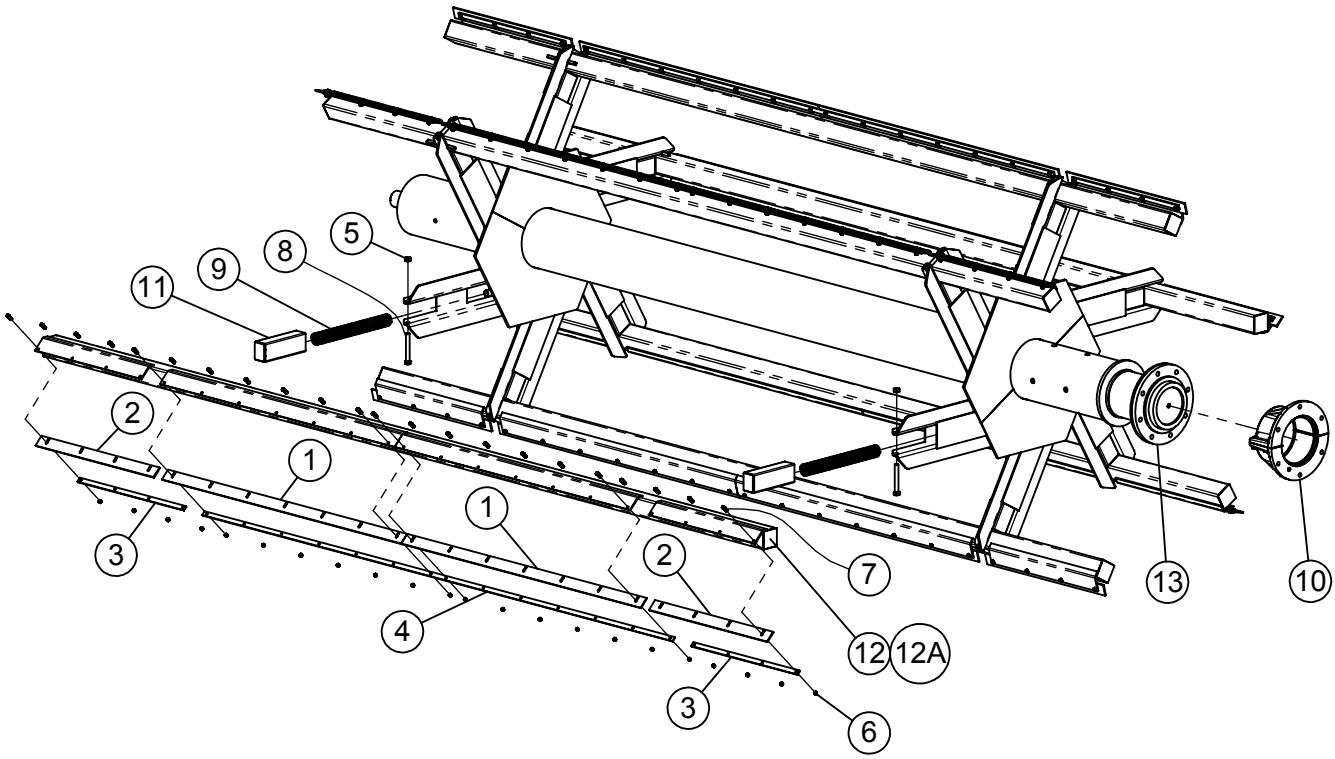

ITEM #	PART #	DESCRIPTION	QTY.
1	189416	CENTER PLASTIC WIPER 2-1/2" x 70-1/2"	12
2	189417	END PLASTIC WIPER 2-1/2" x 34-3/4"	12
3	189418	END WIPER STRAP	12
4	189419	CENTER WIPER STRAP HALF	12
5	400912	HEX CROWN LOCK NUT 3/4"-10 #5 PLTD	12
6	401106	HEX NUT, 3/8"-16 NYLOC #5 PLTD	132
7	405654	HHCS 3/8"-16 x 1-1/4" #5 PLTD	132
8	406489	HHCS 3/4"-10 x 6" #8 PLTD	12
9	410005	SPRING, COMPRESSION, 2 1/2" x 24" x .41"	12
10	782037	NYLATRON CAST BEARING ASSY	1
11	850007	ROTOR SPRING COVER WA	12
12	872567	920-18 WIPER WA	6
12A	872606	920-18 HEAVY WIPER WA	
13	872577	920 6-ARM ROTOR WA	1
	872577A	920-18 HEAVY 6-ARM ROTOR WA	1
	872577RH	920-18 RIGHT HAND DISCHARGE ROTOR WA	1
14	781418	920-18 STANDARD WIPER ASSEMBLY (Includes #'s 1, 2, 3, 4, 6, 7, & 12)	6
15	781428	920-18 HEAVY WIPER ASSEMBLY (Includes #'s 1, 2, 3, 4, 6, 7, & 12A)	6

920-18 5-ARM ROTOR ASSEMBLY

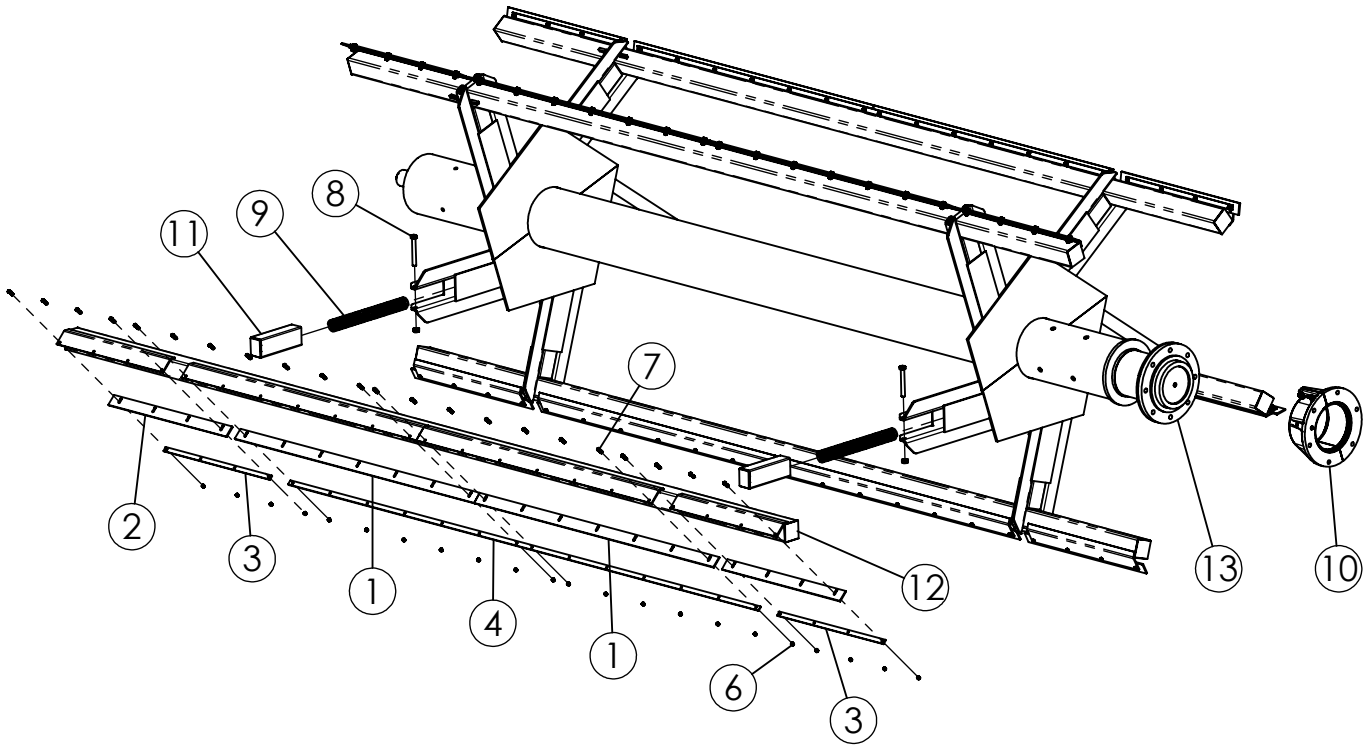

ITEM #	PART #	DESCRIPTION	QTY.
1	189416	CENTER PLASTIC WIPER 2-1/2" x 70-1/2"	10
2	189417	END PLASTIC WIPER 2-1/2" x 34-3/4"	10
3	189418	END WIPER STRAP	10
4	189419	CENTER WIPER STRAP HALF	10
5	400912	HEX CROWN LOCK NUT 3/4"-10 #5 PLTD	10
6	401106	HEX NUT, 3/8"-16 NYLOC #5 PLTD	110
7	405654	HHCS 3/8"-16 x 1-1/4" #5 PLTD	110
8	406489	HHCS 3/4"-10 x 6" #8 PLTD	10
9	410005	SPRING, COMPRESSION, 2 1/2" x 24" x .41"	10
10	782037	NYLATRON CAST BEARING ASSY	1
11	850007	ROTOR SPRING COVER WA	10
12	872567	920-18 WIPER WA	5
	872606	920-18 HEAVY WIPER WA	5
13	872612	920-18 5-ARM ROTOR WA	1
	872612RH	920-18 RIGHT HAND 5-ARM ROTOR WA	1

920-18 FRONT END ASSEMBLY

Table of Contents

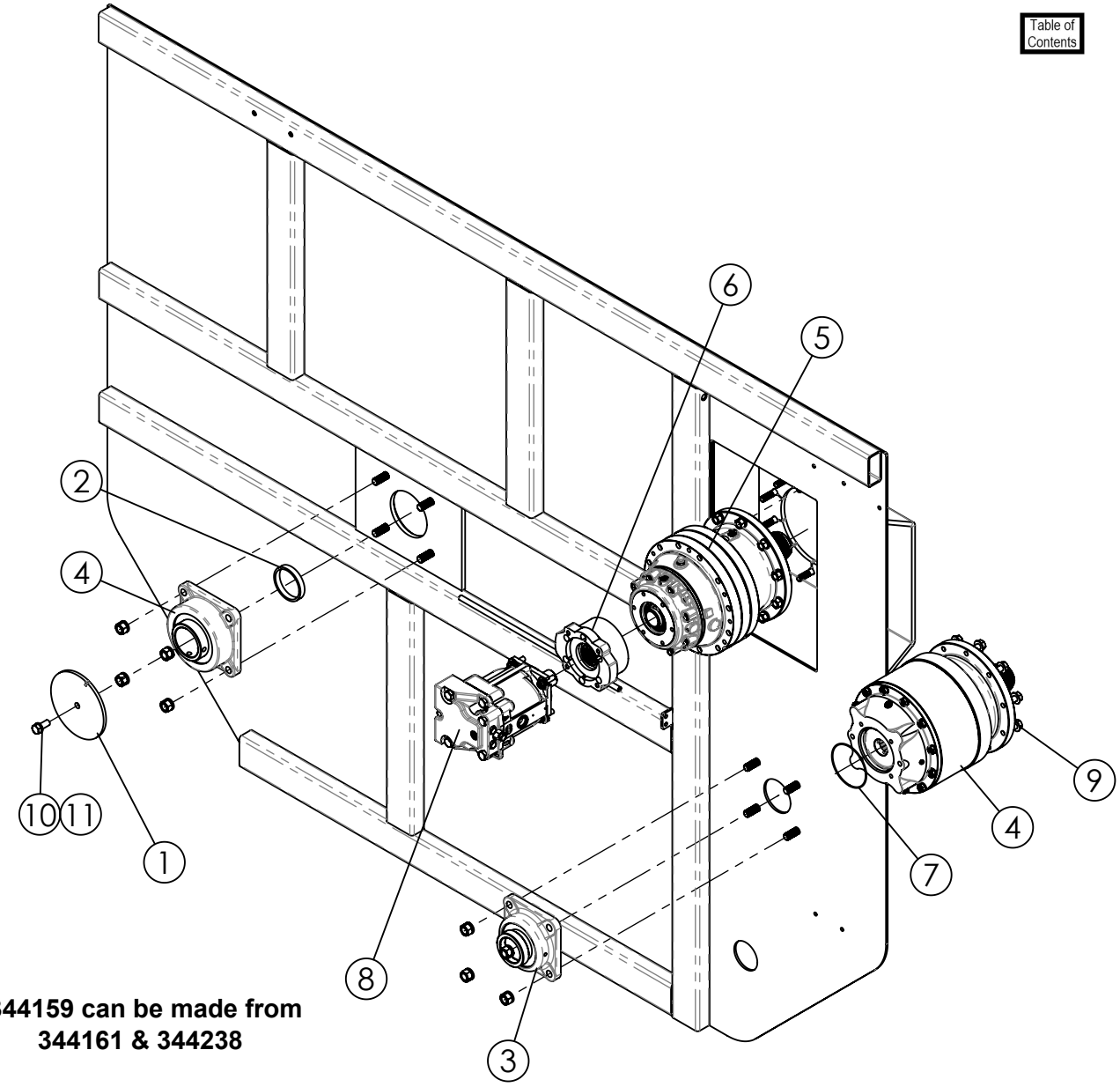

***344159 can be made from 344161 & 344238**

ITEM #	PART #	DESCRIPTION	QTY.
1	185258	ROTOR PLATE INDICATOR, 15/16" OD	1
2	191969	SHAFT SPACER, 5/8" x 3-1/2" ID	1
3	340447	BEARING, 4-BOLT-FLANGE, 2-15/16"	1
4	340555	4-BOLT-FLANGE BEARING 3-7/16"	1
5	344159*	GEARBOX, BREVINI **(Truck & Stationary) (Includes SAE C Input Adapter)**	1
	344123	GEARBOX, BREVINI **(Trailer Only)**	1
	344168	GEARBOX, AUBURN **(Truck & Stationary)**	
6	344238	ADAPTER KIT, "SAE C" FLANGE **(Used only with #344161)**	1
7	351921	O-RING 4.987"ID x .103 c/s (5"ID x 3/32") **(Used only with #344168)**	1
8	360101	HYDRAULIC MOTOR, SUNDSTRAND 100cc **(Truck Only)**	1
9	400129	FLANGE NUT, 5/8"-18 SERRATED	10
10	402010	SPRING LOCK WASHER 5/8" PLTD	1
11	405752	HHCS, 5/8"-11 x 1-1/2" #5 PLTD	1

920-18 TRUCK DRIVELINE ASSEMBLY
AFTER SERIAL #410418659

Table of Contents

NOTE: #'s 11, 24, 25, 28, 29, 32 & 33 REPLACE #10 WHEN A 1350 BALANCER KIT IS NEEDED

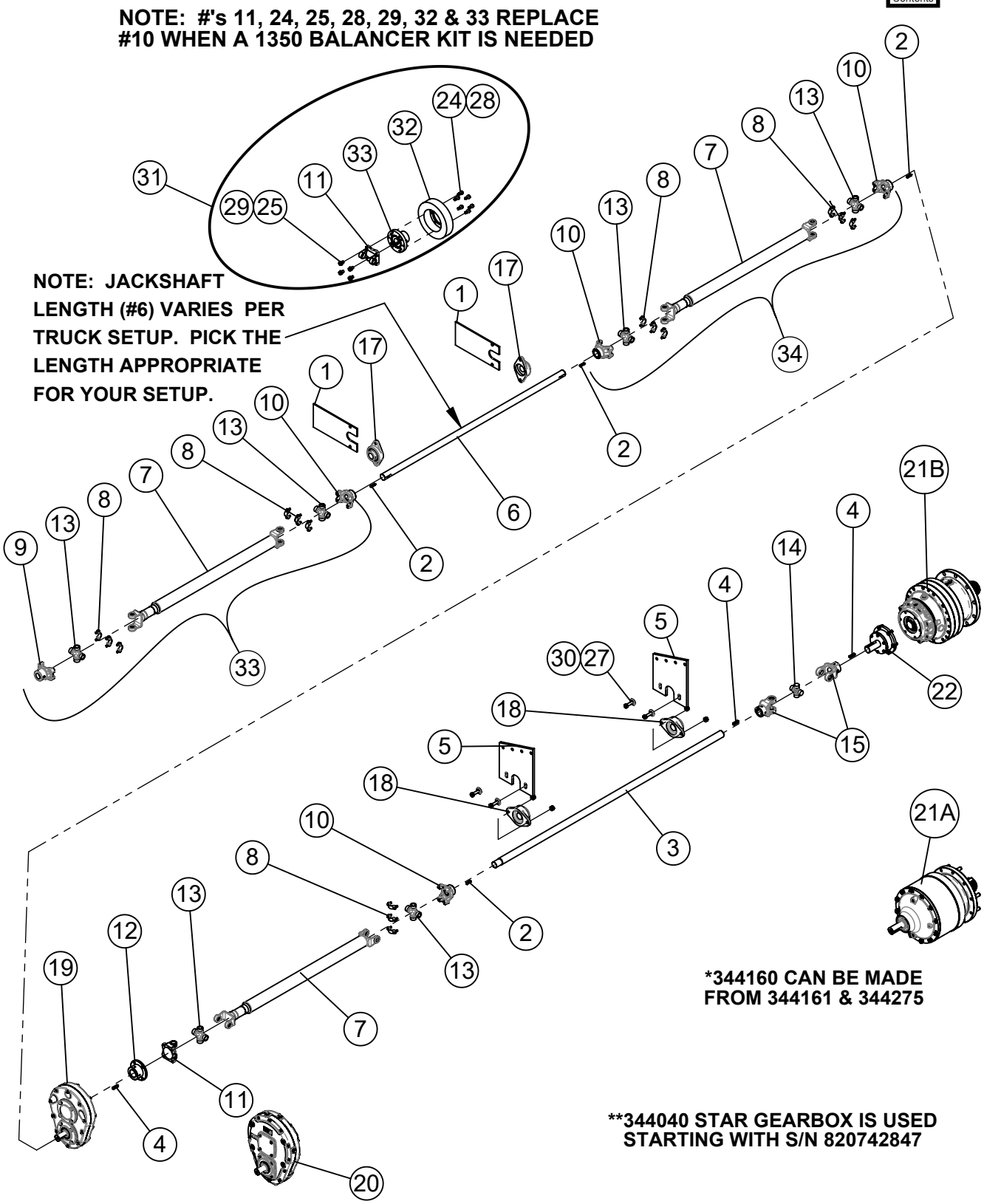

NOTE: JACKSHAFT LENGTH (#6) VARIES PER TRUCK SETUP. PICK THE LENGTH APPROPRIATE FOR YOUR SETUP.

***344160 CAN BE MADE FROM 344161 & 344275**

****344040 STAR GEARBOX IS USED STARTING WITH S/N 820742847**

920-18 TRUCK DRIVELINE ASSEMBLY
AFTER SERIAL #410418659

ITEM#	PART#	DESCRIPTION	QTY.
1	183319	TRUCK JACKSHAFT BRACKET	2
2	185483	KEY 5/16" SQ x 1-1/4" LG.	4
3	187306	TRUCK DRIVELINE x 68"	1
4	188043	3/8" SQ. X 1 7/16" KEY	3
5	189461	920 INPUT BEARING HANGER	2
6	190493	JACKSHAFT, TRUCK, 1-3/8" x 54" (PICK YOUR LENGTH)	1
	185504	JACKSHAFT, TRUCK, 1-3/8" x 48"	
	183327	JACKSHAFT, TRUCK, 1-3/8" x 32"	
7	338054	DRIVE SHAFT ASSY SPICER 1350, 7703-5204	3
8	338413	U-STRAP & BOLT KIT 3-70-28X (1350)	5
9	338423	SPICER YOKE 1-1/4" RD BORE, 5/16" KWY, (3-4-283-1)	1
10	338424	YOKE 1-3/8" SPICER 3-4-613	4
11	338429	SPICER FLANGE YOKE 3-2-119 1350	2
12	338432	1350 COMPANION FLANGE, 1-3/4"	1
13	338436	CROSS KIT, SPICER 1350 5-178X	6
14	338441	CROSS KIT 2300	1
15	338456	YOKE W2300 1-1/2" RB	2
17	340222	BEARING, 1 3/8" - 2 BOLT FLANGE VCJT	2
18	340224	BEARING, 1-1/2" - 2 BOLT FLANGE VCJT	2
19	344022	GEARBOX, 2:1, 200 HUB CITY	1
20	344040**	GEARBOX, 2:1 STAR/WEASLER	1
21A	344169	GEARBOX, AUBURN	1
21B	344160*	GEARBOX, BREVINI (Used after Serial #410491430 & up to Serial #410291430), (Includes Input Shaft)	1
22	344275	SHAFT, UNIVERSAL INPUT SU-2 (USED ONLY WITH #344161)	1
23	400208	HEX NUT 1/2"-13 #5 PLTD	4
24	402006	WASHER SPRING LOCK 3/8" MED PLTD	6
25	402007	SPRING LOCK WASHER 7/16" PLTD	4
26	402008	SPRING LOCK WASHER 1/2" PLTD	4
27	402408	WASHER, FLAT 1/2" MED PLTD	4
28	405653	HHCS 3/8"-16 x 1" #5 PLTD	6
29	405675	HHCS 7/16"-14 x 3/4" USS # 5 PLTD	4
30	405705	HHCS 1/2"-13 x 2" #5 PLTD	4
31	780017	1350 DRIVELINE BALANCER KIT	1
32	872727	DRIVELINE BALANCER	1
33	873149	BALANCER HUB WA (1350)	1

920-18 TRUCK DRIVELINE ASSEMBLY
BEFORE SERIAL #410418659

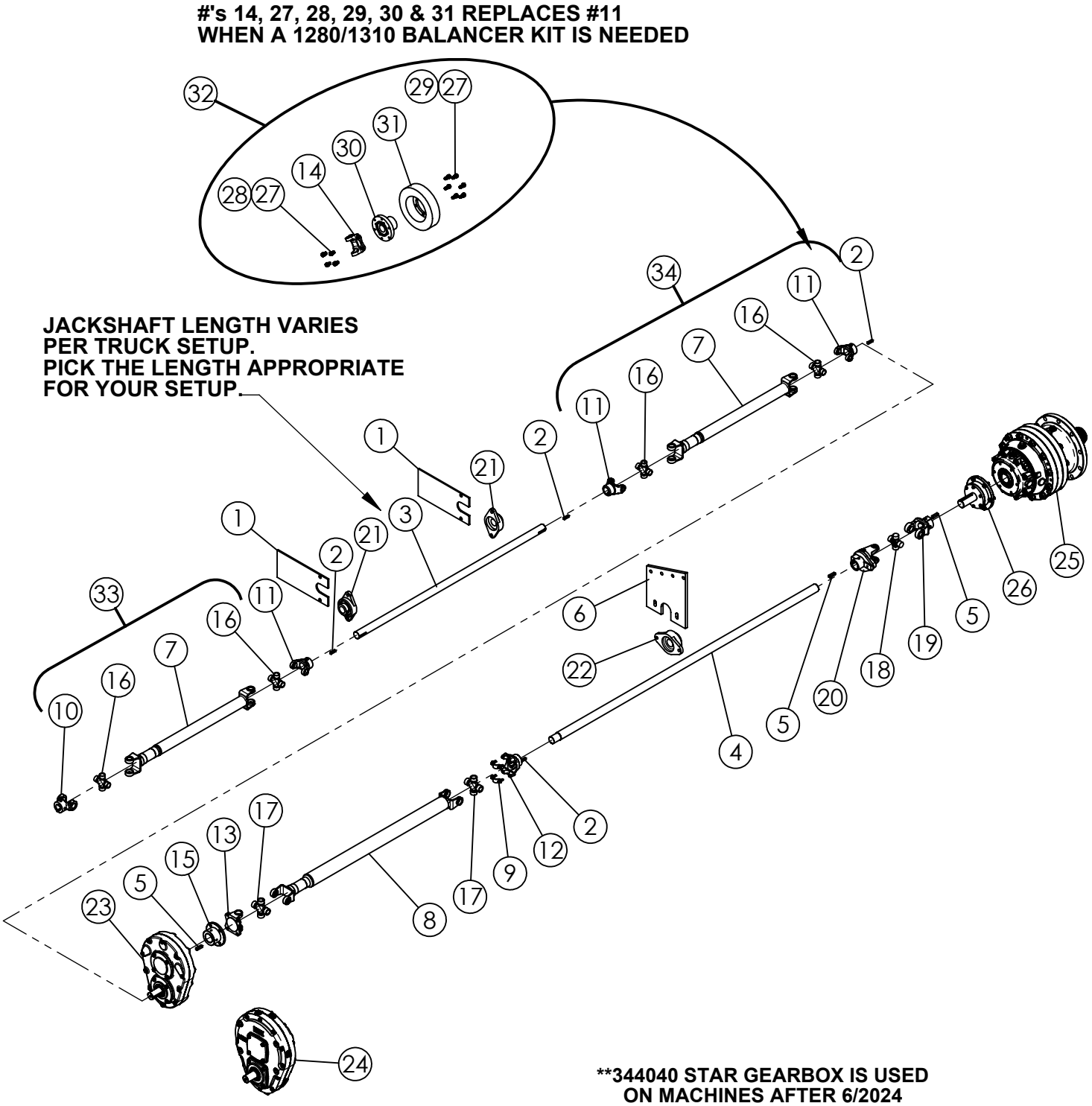

****344040 STAR GEARBOX IS USED
ON MACHINES AFTER 6/2024**

***344160 can be made from
344161 & 344275**

920-18 TRUCK DRIVELINE ASSEMBLY
BEFORE SERIAL #410418659

ITEM #	PART #	DESCRIPTION	QTY.
1	183319	TRUCK JACKSHAFT BRACKET	2
2	185483	KEY 5/16" SQ x 1-1/4" LG.	4
3	185504	JACKSHAFT, 700 TRK, 1-3/8" x 48"	1
	183327	JACKSHAFT, TRUCK, 1-3/8" x 32" (PICK YOUR LENGTH)	1
	190493	JACKSHAFT, 920 TRK, 1-3/8" x 54" (PICK YOUR LENGTH)	1
4	187306	TRUCK DRIVELINE x 68"	1
5	188043	3/8" SQ. X 1 7/16" KEY	3
6	189461	920 INPUT BEARING HANGER	1
7	338053	DRIVE SHAFT ASSY SPICER 1280, 9553-SF	2
8	338054	DRIVE SHAFT ASSY SPICER 1350, 7703-5204	1
9	338413	U STRAP & BOLT KIT 3-70-28X (1350)	2
10	338420	YOKE 1-1/4" 2-4-533 SPICER	1
11	338422	SPICER YOKE 1-3/8" 1280/1310 2-4-1103	3
12	338424	YOKE 1-3/8" SPICER 3-4-613	1
13	338429	SPICER FLANGE YOKE 3-2-119 1350	1
14	338430	FLANGE YOKE, SPICER 1280/1310 2-2-329	1
15	338432	1350 COMPANION FLANGE, 1-3/4"	1
16	338435	SPICER 1280/1310 CROSS KIT, 5-153X	4
17	338436	CROSS KIT, SPICER 1350 5-178X	2
18	338441	CROSS KIT 2300	1
19	338456	YOKE W2300 1-1/2" RB	1
20	338477	SHEAR PIN YOKE - 1-1/2" W2300	1
21	340222	BEARING, 1 3/8" 2-BOLT FLANGE VCJT	2
22	340224	BEARING, 1-1/2" - 2 BOLT FLANGE VCJT	1
23	344022	GEARBOX 2:1, HUB CITY (STANDARD GEARBOX)	1
24	344040	GEARBOX, 2:1 STAR/WEASLER	1
25	344160	GEARBOX, BREVINI (TRUCK & STATIONARY), Includes Input	1
26	344275	SHAFT, UNIVERSAL INPUT SU-2 (BREVINI)	1
27	402006	WASHER SPRING LOCK 3/8" MED PLTD	10
28	405652	HHCS 3/8"-16 x 3/4" #5 PLTD	4
29	405653	HHCS 3/8"-16 x 1" #5 PLTD	6
30	860225	BALANCER HUB WA	1
31	872727	DRIVELINE BALANCER	1
32	780013	1280 DRIVELINE BALANCER KIT	1
33	780486	1280 DRIVESHIFT ASSY 1-1/4" x 1-3/8"	1
34	780494	1280 DRIVESHAFT 1-3/8" x 1-3/8"	1

2:1 GEARBOX ASSEMBLY (HUB CITY) #344022

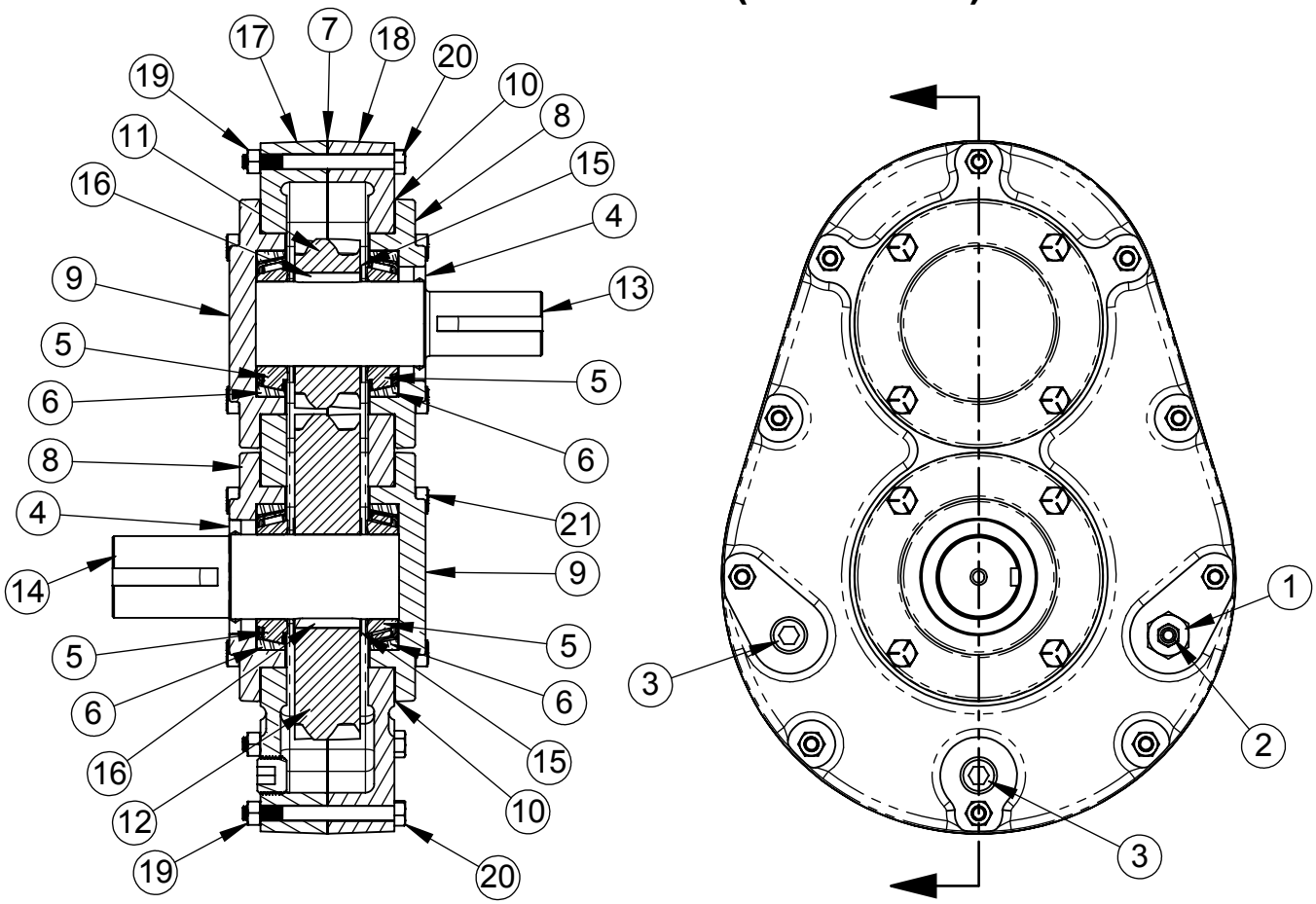

ITEM #	PART #	DESCRIPTION	QTY
1	310710	PIPE BUSHING, 1/2" x 1/8" GALV	1
2	310718	BREATHER PLUG, 1/8" PIPE	1
3	310798	PIPE PLUG, 1/2" INTERNAL HEX	2
4	344209	GEARBOX SEAL 1-3/4" CR 18039	2
5	344210	BEARING CONE 1-13/16" ID 18690	4
6	344211	BEARING CUP 3-1/8" OD 18620	4
7	344212	CENTER CASE GASKET DC	1
8	344213	OPEN END CAP HUB CITY	2
9	344214	CLOSED END CAP HUB CITY	2
10	344215	CAP GASKET HC .002	4
11	344216	HIGH SPEED HELICAL GEAR 20T	1
12	344217	LOW SPEED HELICAL GEAR 40T	1
13	344218	HIGH SPEED SHAFT 1-3/8" HC 2:1	1
14	344223	LOW SPEED SHAFT 1-3/4" HC 2:1	1
15	344267	SPACER HUB CITY GEARBOX	4
16	344268	GEARBOX KEY 3/8"sq x 1-7/16" HC	2
17	344269	HOUSING HALF W/PIPE PLUGS HC	1
18	344270	HOUSING HALF WO/PIPE PLUGS HC	1
19	400205	HEX NUT 5/16"-18 #5 PLTD	10
20	405637	HHCS 5/16"-18 x 3-1/4" #5 PLTD	10
21	405653	HHCS 3/8"-16 x 1" #5 PLTD	16

2:1 GEARBOX ASSEMBLY (STAR/WEASLER) #344040

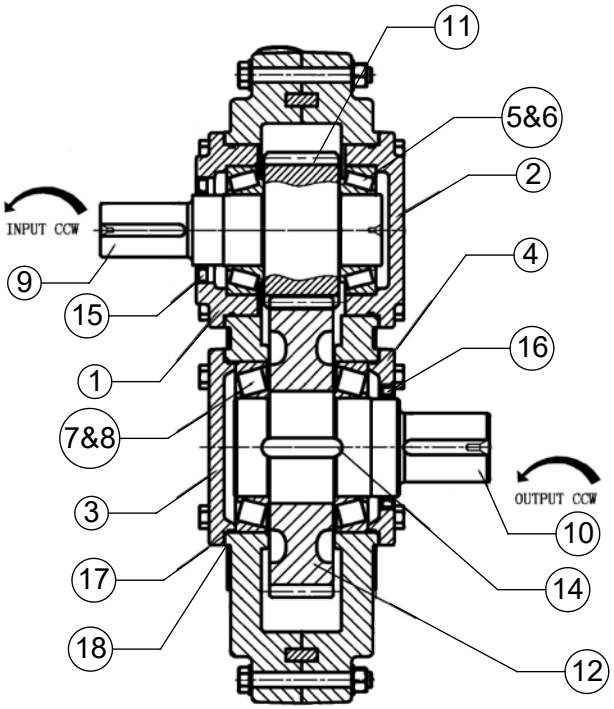

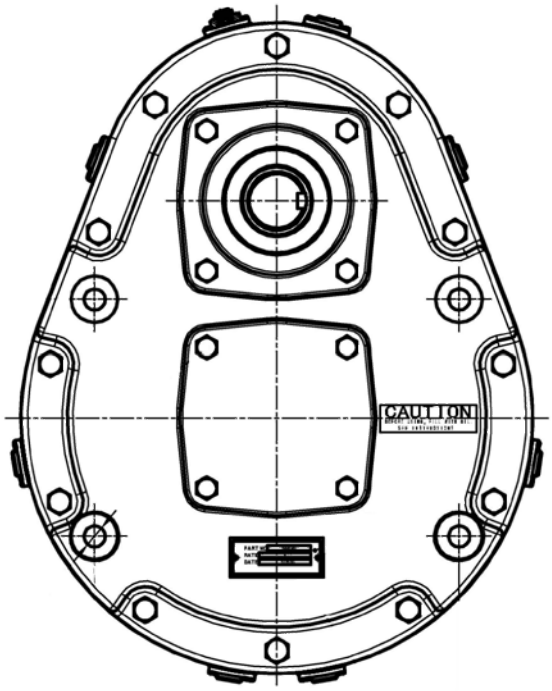

ITEM #	PART #	DESCRIPTION	QTY.
1	344244	OPEN END CAP, HIGH SPEED SHAFT	1
2	344245	CLOSED END CAP, HIGH SPEED SHAFT	1
3	344246	CLOSED END CAP, LOW SPEED SHAFT	1
4	344247	OPEN END CAP, LOW SPEED SHAFT	1
5	344249	BEARING CONE HIGH SPEED SHAFT 25590	2
6	344249	BEARING CUP HIGH SPEED SAHFT 25520	2
7	344250	BEARING CONE LOW SPEED SHAFT 390A	2
8	344251	BEARING CUP LOW SPEED SHAFT 394A	2
9	344252	INPUT SHAFT HIGH SPEED	1
10	344253	OUTPUT SHAFT LOW SPEED	1
11	344254	SPUR GEAR, Z=25T DP=3.629	1
12	344255	SPUR GEAR, Z=50T DP=3.629	1
13	344256	KEY, 0.27 x 11.65	1
14	344257	KEY, 1/2 x 1.18	1
15	344258	SEAL, 1.5 x 2.44 x 0.315	1
16	344259	SEAL, 3.00 x 3.37 x 0.315	1
17	344260	O-RING, 1.10 x Ø2.65	4
18	344261	GASKET, CAP	4

920-18 TRAILER DRIVELINE ASSEMBLY

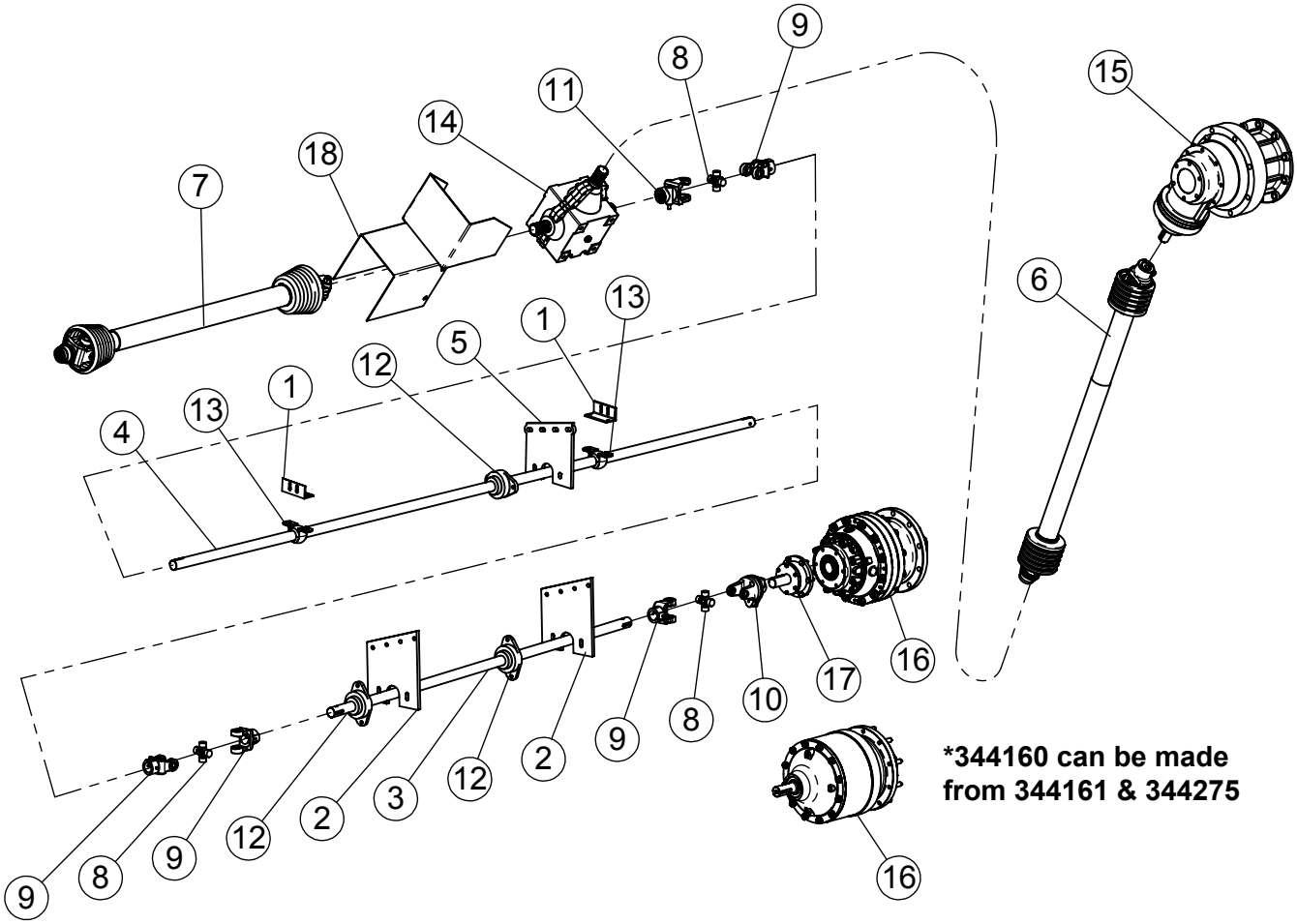

ITEM #	PART #	DESCRIPTION	QTY.
1	185299	CARRIER BEARING ANGLE	2
2	189461	920 INPUT BEARING HANGER	2
3	189740	DRIVE LINE- 68"	1
4	192091	900 TRL DRIVELINE	1
5	190669	INPUT BEARING HANGER SHORT	1
6	338027	DRIVE SHAFT W2400 1-3/4"-20T x 1-1/2" KEY	1
7	338030	DRIVE SHAFT W2500 1-3/4"-20T - REQUIRES YOKE SWAP	1
8	338441	CROSS KIT 2300	3
9	338456	YOKE W2300 1-1/2" RB	4
10	338456	YOKE - 1-1/2" W2300	1
11	338561	YOKE 1-3/4" - 20 SPL. QD PIN W2400	1
12	340224	BEARING, 1-1/2" - 2 BOLT FLANGE VCJT	3
13	341024	BEARING, 1-1/2" WOOD BLOCK	2
14	782063	GEARBOX, TEE 1:1 1-3/4"-20 SPLINE, WITH BREATHER PORT	1
15	344123	GEARBOX, BREVINI	1
16	344160*	GEARBOX, BREVINI, **(Prior to #410291430), Includes Input**	1
	344169	GEARBOX, AUBURN E2488-000-03	1
17	344275	SHAFT, UNIVERSAL INPUT SU-2,BREVINI **(Used only with #344161)**	1
* 18	872689	920 TRAILER DRIVE LINE SHIELD	1

920-18 TRACTOR TO MIXER DRIVELINE

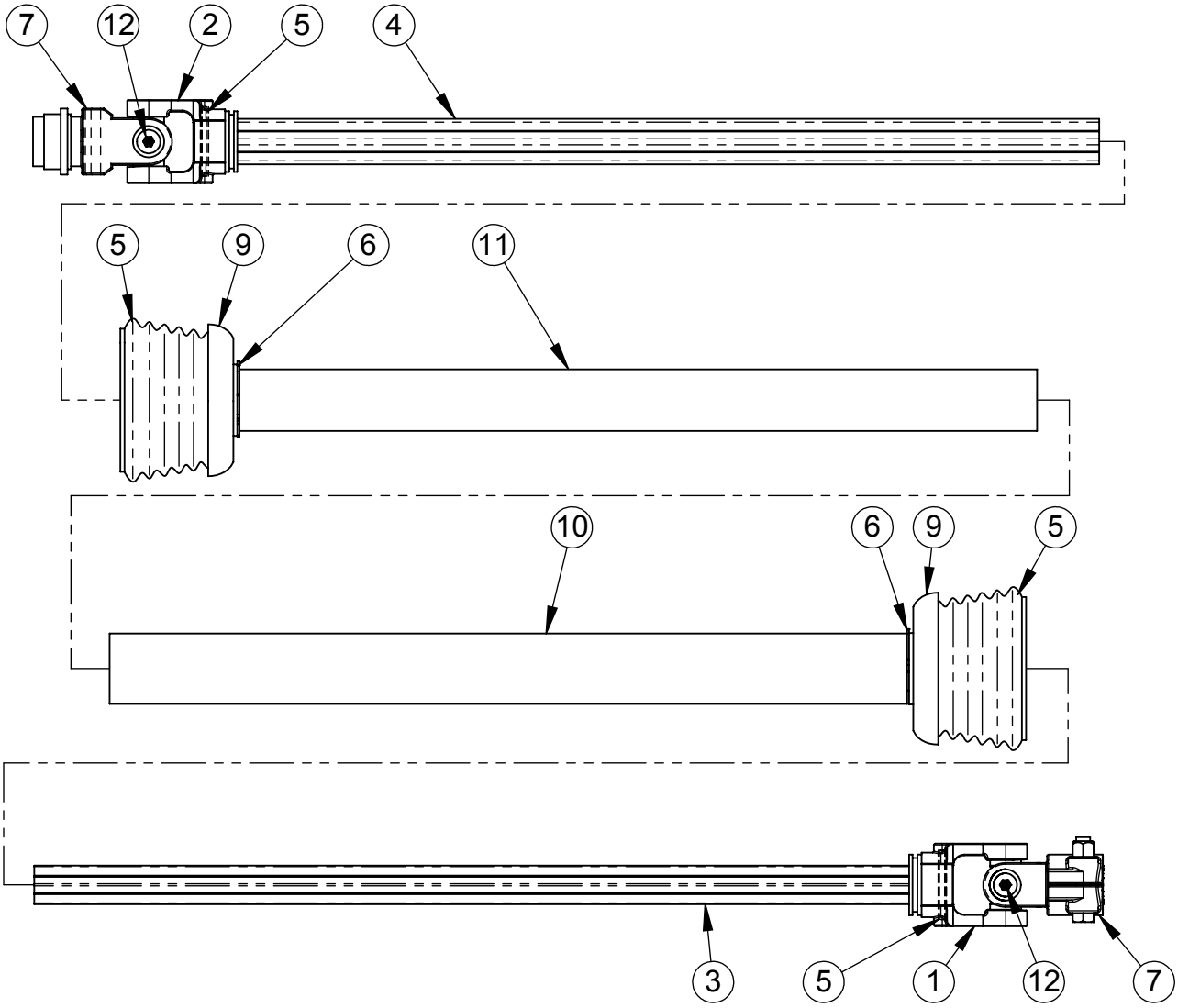

ITEM #	PART #	DESCRIPTION	QTY.
1	338453	INBOARD YOKE W2500 S4 097133	1
2	338454	INBOARD YOKE S5, W2500 097140	1
3	338465	INNER PROFILE S4, W-2400 373013	1
4	338466	OUTER PROFILE, S5L 324190	1
5	338473	ROLL DRIVE PIN WLTSH 10MM x 90MM	4
6	338489	BEARING RING SC25, 087276	2
7	338558	YOKE 1-3/4"-20 SPL. QD W2500, 362434	2
9	338623	REINFORCING COLLAR 359474	2
10	338625	GUARD TUBE, OUTER	1
11	338626	GUARD TUBE, INNER	1
12	338652	CROSS KIT W2500 Zerk in Cap 190224	2

920-18 T-GEARBOX TO TOP AUGER GEARBOX DRIVELINE

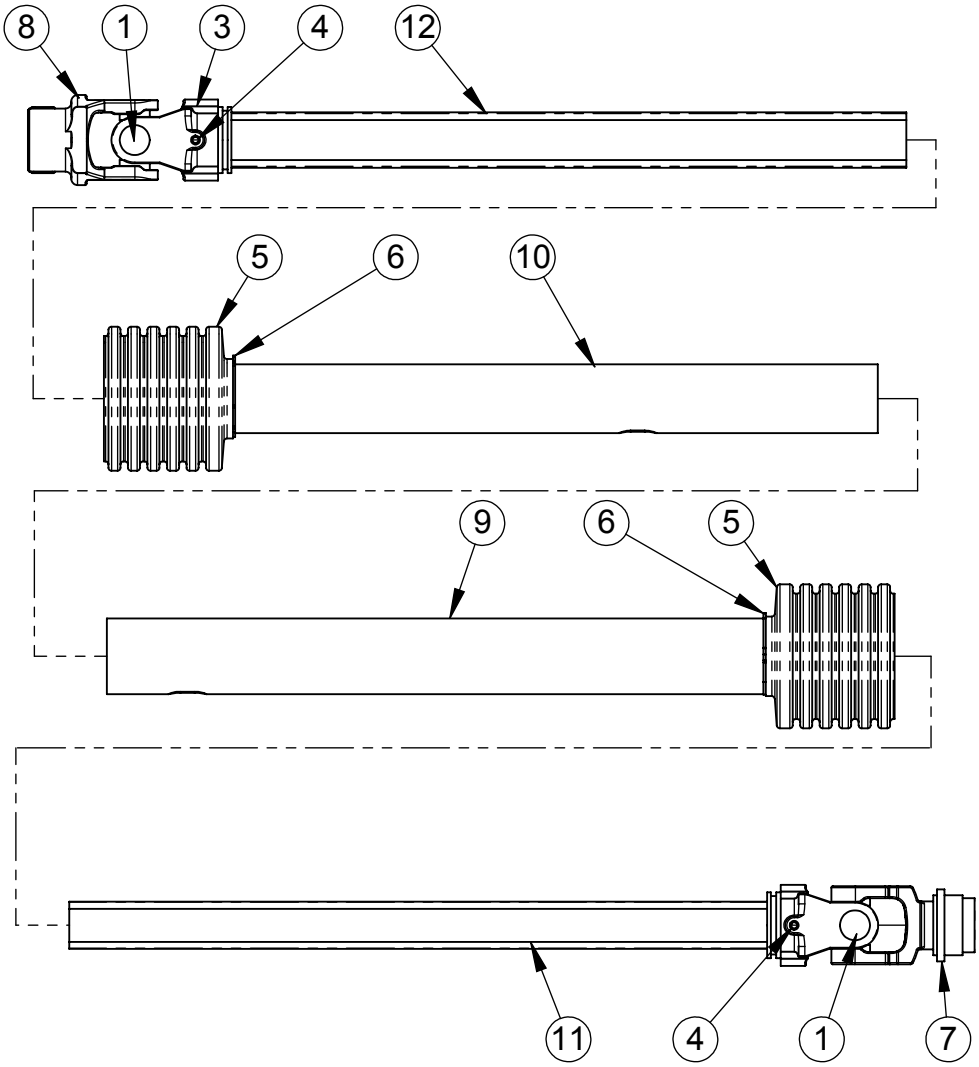

ITEM #	PART #	DESCRIPTION	QTY.
1	338443	CROSS KIT 32mm x 76mm W2400 312410	2
2	338450	INBOARD YOKE 1b W2400 019518	1
3	338452	INBOARD YOKE W2400 019519	1
4	338473	ROLL DRIVE PIN WLTSH 10MM x 90MM	2
5	338486	SHIELD CONE 6-RIB, 365366 W-2400	2
6	338489	BEARING RING SC25, 087276	2
7	338559	YOKE 1-3/4" - 20 SPL. QD PIN	1
8	338560	Yoke 1-1/2" 3/8"KWY W2400 CLAMP BOLT	1
9	338580	W-2400 OUTER SHIELD TUBE OVL 097340	1
10	338581	W-2400 INNER SHIELD TUBE ROUND 095227	1
11	338585	W- 2400 OUTER PROFILE - 0082915 (30.7")	1
12	338586	W- 2400 OUTER PROFILE - 082916 (30.12")	1

920-18 TRUCK PLATFORM ASSEMBY

Table of Contents

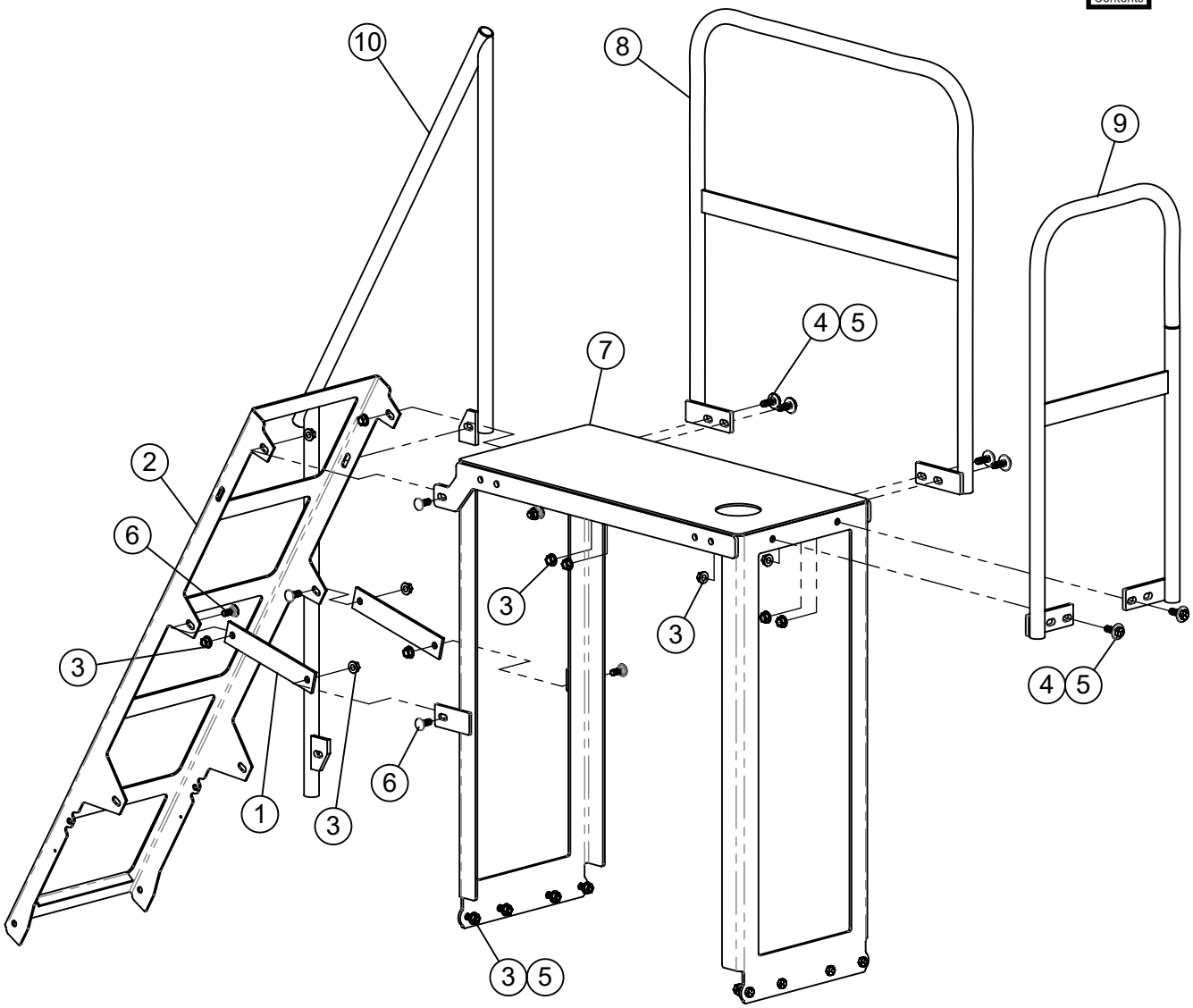

ITEM #	PART #	DESCRIPTION	QTY.
1	171452	LADDER BAR	2
2	190983	LADDER, FORMED 6 RUNG	1
3	400114	HEX NUT, 1/2-13 SERRATED FLANGE #5	22
4	402408	WASHER, FLAT 1/2" MED PLTD	6
5	405703	HHCS 1/2"-13 x 1-1/2" #5 PLTD	14
6	407101	CHCS 1/2"-13 x 1-1/4" #5 PLTD	8
7	872607	TRUCK PLATFORM W.A.	1
8	872608	HANDRAIL W.A.	1
9	872745	END HAND RAIL W.A.	1
10	873395	920 HANDRAIL WA	1

920-18 STATIONARY DRIVELINE ASSEMBLY WITH 1350 DRIVE SHAFT

Table of Contents

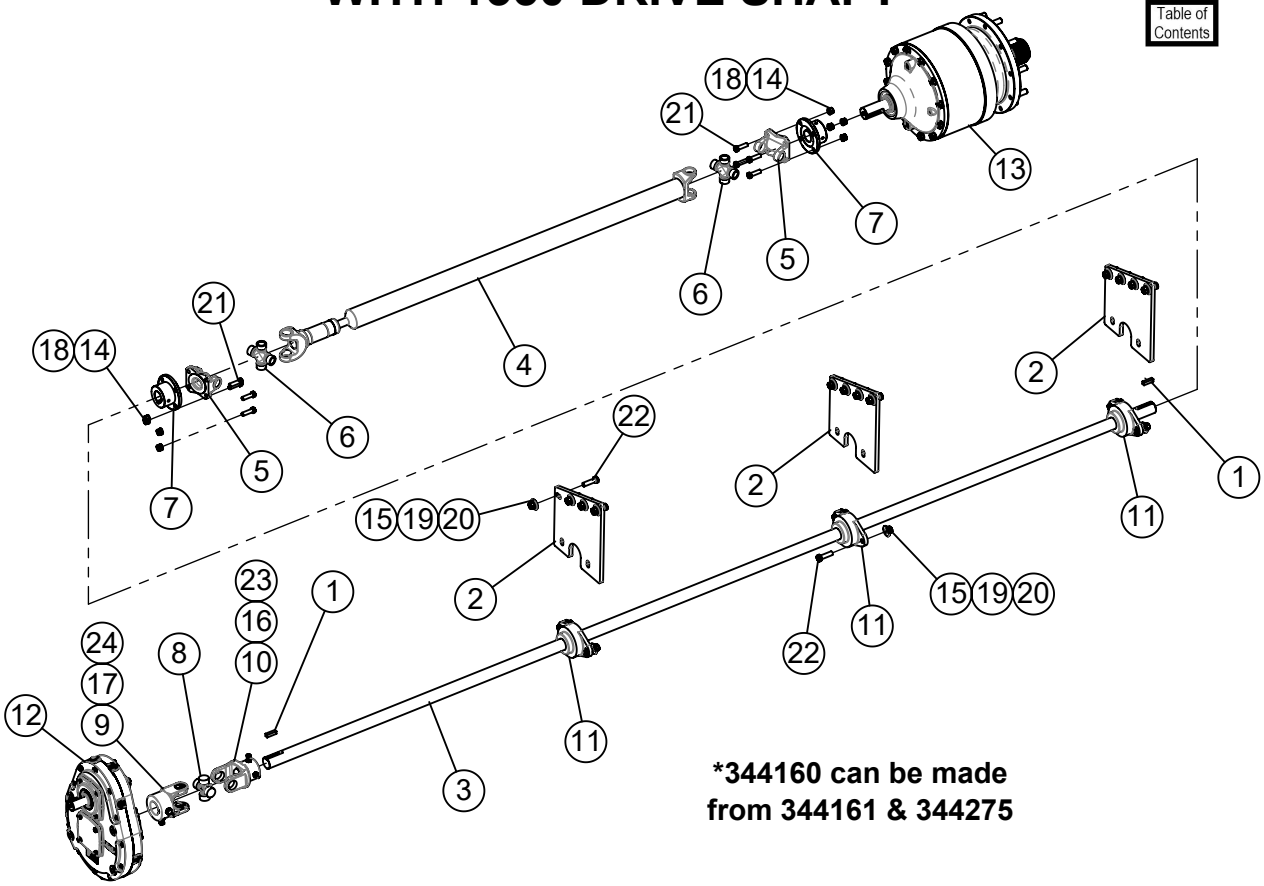

ITEM #	PART #	DESCRIPTION	QTY.
1	188043	3/8" SQ. X 1 7/16" KEY	2
2	189461	900 INPUT BEARING HANGER 10" x 12 1/4"	3
3	192726	920 STATIONARY DRIVELINE, 135"	1
4	380000	DRIVELINE 1350 61-1/2" C-C ASSY (Includes Item #'s 5 & 6)	1
5	338429	FLANGE YOKE, SPICER 1350	2
6	338436	CROSS KIT, SPICER 1350 5-178X	2
7	338406	COMPANION FLANGE, 1350, 1-1/2" BORE	2
8	338443	CROSS KIT 32mm x 76mm W2400 312410	1
9	338451	Yoke 1-3/4"RD, W2400	1
10	338463	Yoke W2400 1-1/2" 3/8"KWY 383388	1
11	340224	BEARING, 1-1/2" - 2 BOLT FLANGE VCJT	3
12	344040	GEARBOX, 2:1 WEASLER	1
13	344169	GEARBOX, AUBURN 60003782	1
	344160*	GEARBOX, BREVINI, (Includes SAE C Input Adapter)	1
14	400207	HEX NUT, 7/16"-14, #5 PLTD	8
15	400208	HEX NUT 1/2"-13 #5 PLTD	18
16	400606	HEX JAM NUT 3/8-16"	2
17	400608	HEX JAM NUT 1/2"-13 #5 PLTD	2
18	402007	SPRING LOCK WASHER 7/16" PLTD	8
19	402008	SPRING LOCK WASHER 1/2" PLTD	19
20	402408	WASHER, FLAT 1/2" MED PLTD	18
21	405678	HHCS 7/16"-14 x 1 1/2" #5 PLTD	8
22	405704	HHCS 1/2"-13 x 1-3/4" #5 PLTD	18
23	409543	SQ HD SET SCREW CUP, 3/8" x 1"	2
24	409582	SQ HD SET SCR CUP 1/2" x 1-1/2"	2

920-18 STATIONARY DRIVELINE ASSEMBLY

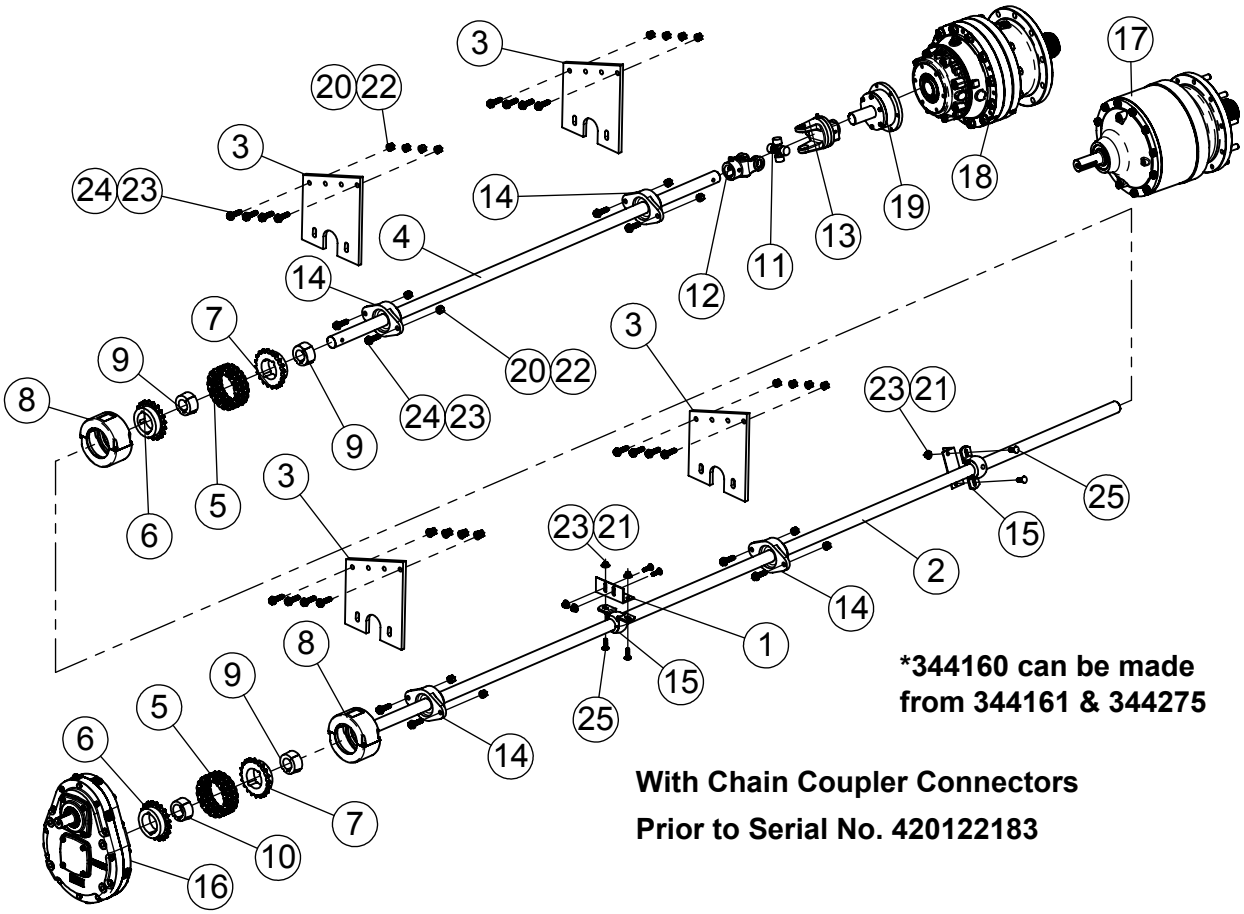

ITEM #	PART #	DESCRIPTION	QTY.
1	185299	CARRIER BEARING ANGLE	2
2	188505	920 STATIONARY DRIVELINE, 131-3/4" **(After Ser. #410491429)**	1
	192087	920 STATIONARY DRIVELINE, 130-3/4" **(Before Ser. #410491429)**	1
3	189461	920 INPUT BEARING HANGER	4
4	189740	DRIVE LINE- 68"	1
5	320720	6020 CHAIN	2
6	332610	SPROCKET 6020 TLF CHAIN COUPLING	2
7	332611	SPROCKET 6020 TLH CHAIN COUPLING	2
8	332614	COVER, 6020 CHAIN COUPLING	2
9	335024	BUSHING, 2012 TL 1-1/2"	3
10	335028	BUSHING, 2012 TL 1-3/4"	1
11	338441	CROSS KIT 2300	1
12	338456	YOKE W2300 1-1/2" RB	1
13	338477	SHEAR PIN YOKE - 1-1/2" W2300	1
14	340224	BEARING, 1-1/2" - 2 BOLT FLANGE VCJT	4
15	341024	BEARING, 1-1/2" WOOD BLOCK	2
16	344040	GEARBOX, 2:1 STAR/WEASLER	1
17	344169	GEARBOX, AUBURN	1
18	344160*	GEARBOX, BREVINI**, Includes Input**	1
19	344275	SHAFT, UNIVERSAL INPUT SU-2 **(Use Only With #344161)**	1
20	400208	HEX NUT 1/2"-13 #5 PLTD	24
21	401106	HEX NUT, 3/8"-16 NYLOC #5 PLTD	6
22	402008	SPRING LOCK WASHER 1/2" PLTD	24
23	402406	FLAT WASHER 3/8" PLTD	34
24	405704	HHCS 1/2"-13 x 1-3/4" #5 PLTD	24
25	407041	CHCS 3/8"-16 x 1-1/4" #5 PLTD	6

920-18 STATIONARY ELECTRIC DRIVE ASSEMBLY

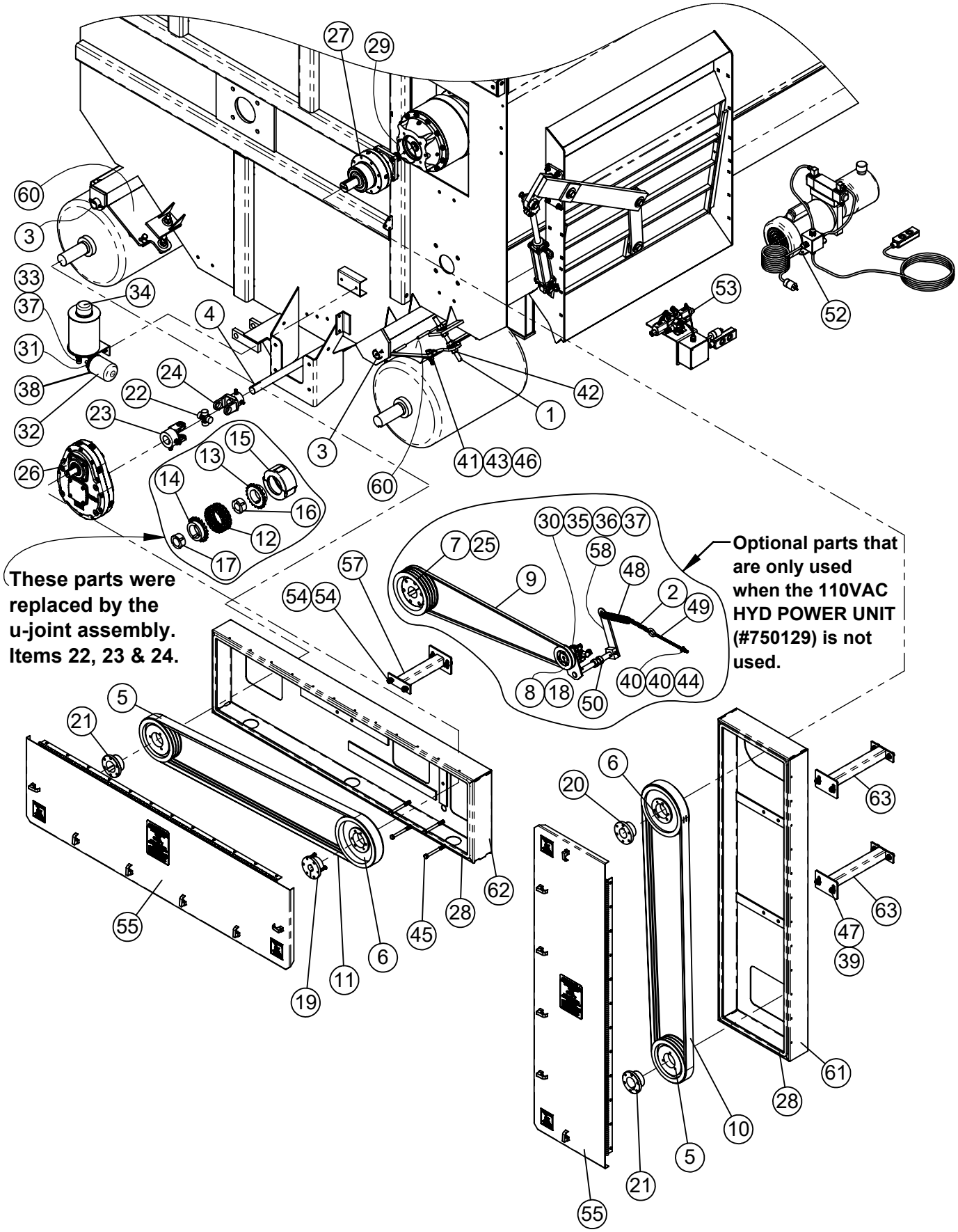

920-18 STATIONARY ELECTRIC DRIVE ASSEMBLY

ITEM #	PART #	DESCRIPTION	QTY.
1	185115	ADJUSTING ALL THREAD, 3/4"-10 x 10"	2
2	185488	CHAIN-2/0 PASSING LINK	1
3	185645	720 MOTOR PIVOT PIPE	2
4	192726	920 STATIONARY DRIVELINE, 135" **(used with u-joint & yokes)**	1
	188505	920 STATIONARY DRIVELINE, 131.5" **(used with chain coupler)**	1
	192087	920 STATIONARY DRIVELINE, 130-3/4" **(before Ser. #410491429)**	1
5	324009	SHEAVE, 5V-3 GROOVE 9.25" SF	2
6	324011	SHEAVE, 5V-3 GRV 10.9 SF	2
7	324027	SHEAVE 5V-4 GRV 9.25E	1
8	324046	SHEAVE, 1B x 4.6 SDS	1
9	325099	V-BELT BX100	1
10	325130	V-BELT POWERBAND 3/5VX-1500	1
11	325135	V-BELT POWERBAND 3/5VX-1400	1
12	320720	6020 CHAIN	1
13	332610	SPROCKET 6020 TLF CHAIN COUPLING	1
14	332611	SPROCKET 6020 TLH CHAIN COUPLING	1
15	332614	COVER, 6020 CHAIN COUPLING	1
16	335024	BUSHING, 2012 TL 1-1/2"	1
17	335028	BUSHING, 2012 TL 1-3/4"	1
18	336009	BUSHING, SDS 1/2" QD	1
19	336022	TSUBAKI SF 1-3/8 QD BUSHING	1
20	336032	QD BUSHING, SF x 2" **(Used with Auburn GB & 344083 OHLA)**	1
	336035	QD BUSHING, SF x 2-1/4" **(Used with Brevini GB & 192198 OHLA)**	1
21	336042	QD BUSHING, SF x 2 3/8"	2
22	338443	CROSS KIT 32mm x 76mm W2400 312410	1
23	338451	Yoke 1-3/4"RD, W2400	1
24	338463	Yoke W2400 1-1/2" 3/8"KWY 383388	1
25	336137	QD BUSHING, E x 2-1/8"	1
26	344040	GEARBOX, 2:1 WEASLER	1
27	344083	ADAPTOR, OVERHUNG, AUBURN **(Used with Auburn)**	1
	192198	ZERO-MAX OVERHUNG ADAPTER w/Oil **(Used with Brevini)**	1
28	351056	RUBBER BULB SEAL 5/32"	2
29	351921	O-RING 4.987"ID x .103 c/s (5"ID x 3/32")	1
30	362011	PARKER PUMP - D05AA2A CW	1
31	362403	FILTER HEAD 3/4", ZAF-07-25-0	1
32	362440	FILTER ELEMENT - AE-10	1
33	362504	SUCTION SCREEN (200 MESH)	1
34	362550	FILLER CAP ASSY. FLOE EZY - AB1000-3	1
35	368040	SWIVEL 90v 3/8FP x 3/4MOR	1
36	368050	ADAPTER 7/8 MOR x 3/4 FPS 90	1
37	368512	PUSH LOCK HOSE BARB (3/4)x 3/4" MP	2
38	368612	HYD BUSHING, STEEL 3/4"MP x 3/8"FP	1
39	400114	HEX NUT, 1/2-13 SERRATED FLANGE #5	8
40	400206	HEX NUT 3/8"-16 #5 PLTD	4
41	400210	HEX NUT 5/8"-11 #5 PLTD	8
42	400212	HEX NUT 3/4"-10 #5 PLTD	8
43	402010	SPRING LOCK WASHER 5/8" PLTD	8
44	402406	FLAT WASHER 3/8" PLTD	1
45	405715	HHCS 1/2"-13 x 5" #5 PLTD	4
46	405756	HHCS, 5/8"-11 x 2-1/2" #5 PLTD	8
47	407912	HHCS 1/2"-13 x 1-1/4" SERR #5 PLTD	8
48	410008	PULL SPRING 1 1/4" X 5 1/4"	1
49	410852	EYE BOLT 3/8" X 8"	1
50	412416	COLLAR, SET ASSY	2
51	434003	SYNTHETIC GEAR LUBE 75W-90	1
52	750129	110VAC HYD POWER UNIT	1
53	781004	HYD VALVE ASSY-120V ELEC SOL	1
54	781112	ELEC SHIELD PUMP IDLER BOLT SACK	1
55	781462	920 BELT SHIELD DOOR ASSEMBLY	2
56	870477	OIL RESERVOIR W.A.	1
57	872003W	BELT SHIELD SUPPORT	1
58	872136	PUMP LEVER ARM	1
59	872138	PUMP SWING ARM	1
60	872724	60-75 HP ELECTRIC MOTOR BASE	2
61	874147	920 AUGER BELT SHIELD	1
62	874206	920 ELECTRIC BELT SHEILD (WEISLER)	1
63	874216	BELT SHIELD SUPPORT WA	2

HYDRAULIC VALVE ASSEMBLY
115V ELECTRIC SOLENOID
Used on Stationary Units with belt driven pump

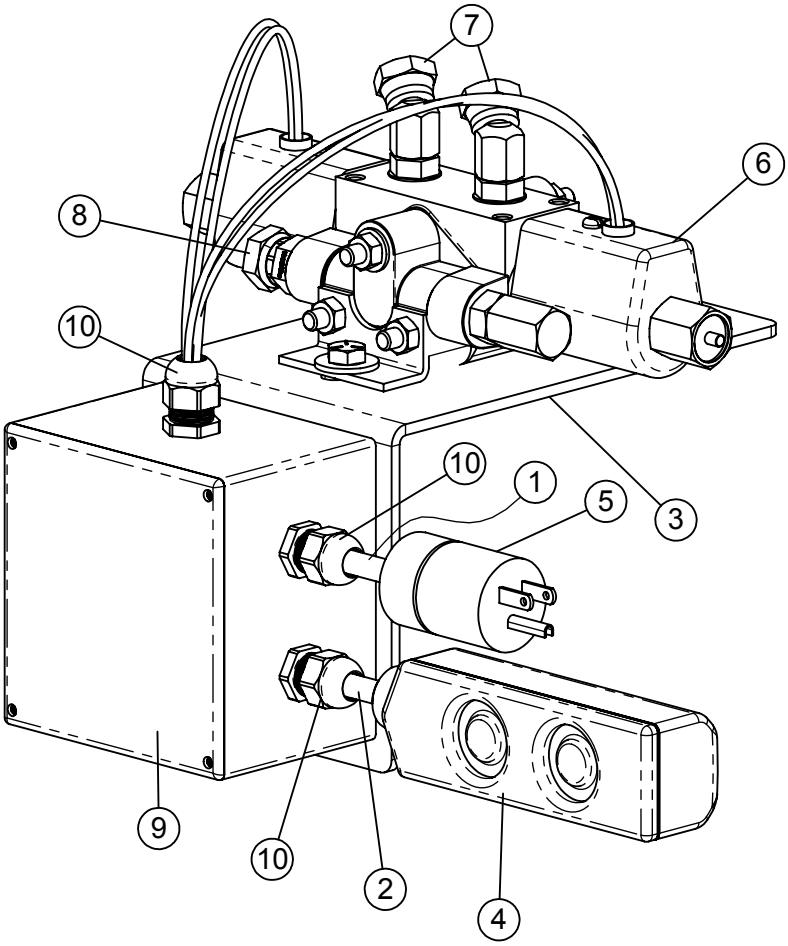

ITEM #	PART #	DESCRIPTION	QTY.
1	185560	CORD, 14-3 SJO ELEC TRL, 14 FT	1
2	185561	CORD, 14-4 SJO ELEC TRL, 25 FT	1
3	189250	ELECTRIC SOLONOID BRACKET - 5 1/2" x 14"	1
4	357700	SWITCH - HW 4052 PENDANT	1
5	358410	MALE PLUG - WH 1447 115V	1
6	362205	Hyd Valve 115V Sngl MV5	1
7	368024	HYD SWIVEL 9/16"MOR x 3/8"FPS 45º	2
8	368115	STRAIGHT ADAPTER 9/16 MOR x 3/8 FPS	2
9	453717	J-BOX SHELL	1
10	455310	599-031 COMPRESSION GROMMET	3
11	358806	WIRE NUT - IDEAL 30-451	5
12	401104	HEX NUT, NYLOC 1/4"-20 #5 PLTD	1
13	401106	HEX NUT, 3/8"-16 NYLOC #5 PLTD	2
14	402404	FLAT WASHER 1/4" PLTD	2
15	402406	FLAT WASHER 3/8" PLTD	4
16	405604	HHCS 1/4"-20 x 1" #5 PLTD	1
17	405654	HHCS 3/8"-16 x 1-1/4" #5 PLTD	2

ELECTRIC HYDRAULIC POWER UNIT, 115V AC
Used on Stationary Units

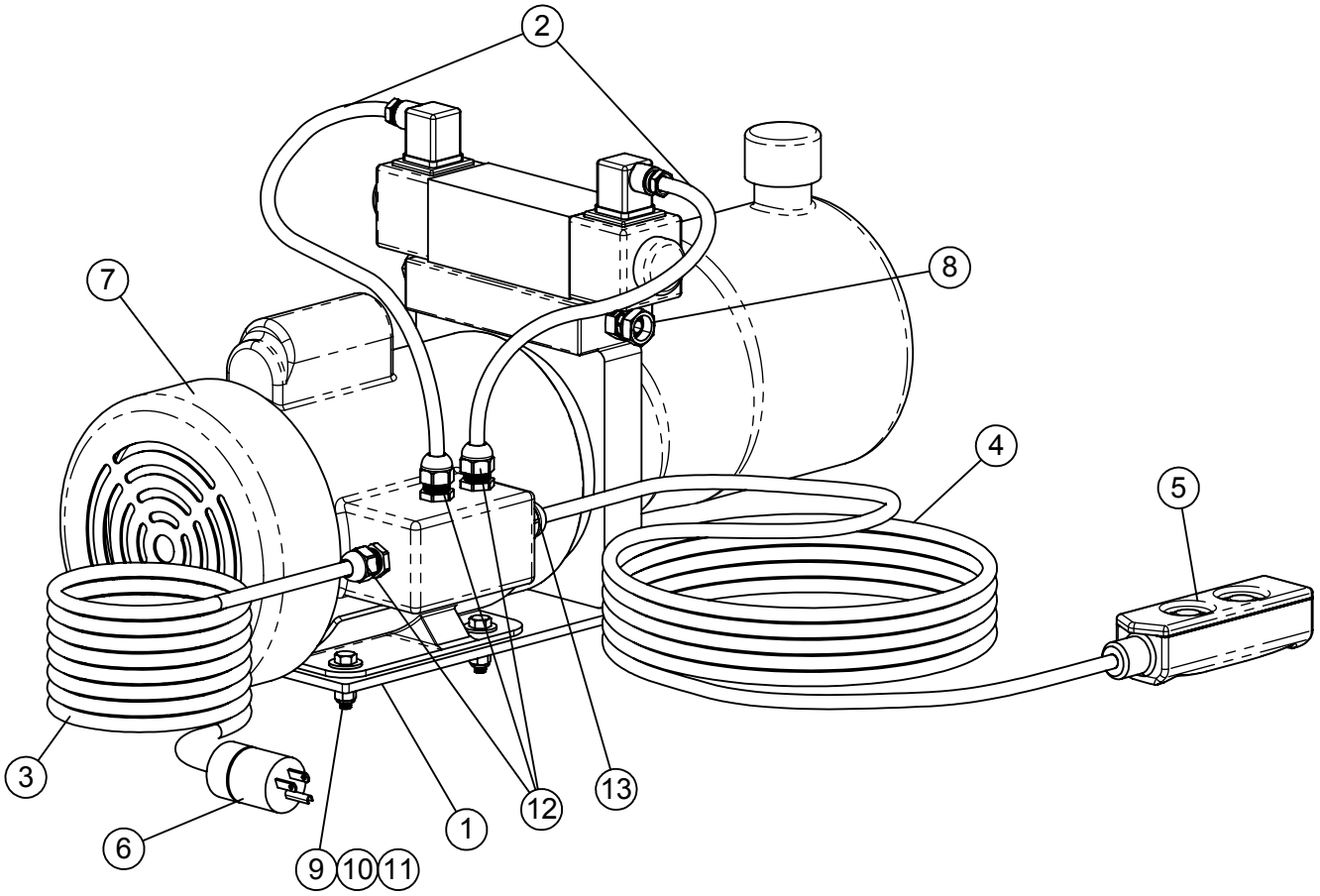

ITEM #	PART #	DESCRIPTION	QTY.
1	150914	POWER UNIT BASE	1
2	185559	ELEC CORD x 26", 14-3 SJO	2
3	185560	ELEC CORD x 14', 14-3 SJO	1
4	185561	ELEC CORD x 25', 14-4 SJO	1
5	357700	SWITCH - HW 4052 PENDANT	1
6	358410	MALE PLUG - WH 1447 115V	1
7	362151	HYDRAULIC POWER UNIT 115V AC	1
8	368115	STRAIGHT ADAPTER 9/16 MOR x 3/8 FPS	2
9	401105	HEX NUT, 5/16"-18 NYLOC #5 PLTD	4
10	402405	FLAT WASHER MED PLTD 5/16"	4
11	405629	HHCS 5/16"-18 x 1-1/4" #5 PLTD	4
12	455310	599-031 COMPRESSION GROMMET	3
13	357010	COMPRESSION GROMMET, 1/2"MP	1

920-18 OIL BATH DOOR GROUP ASSEMBLY

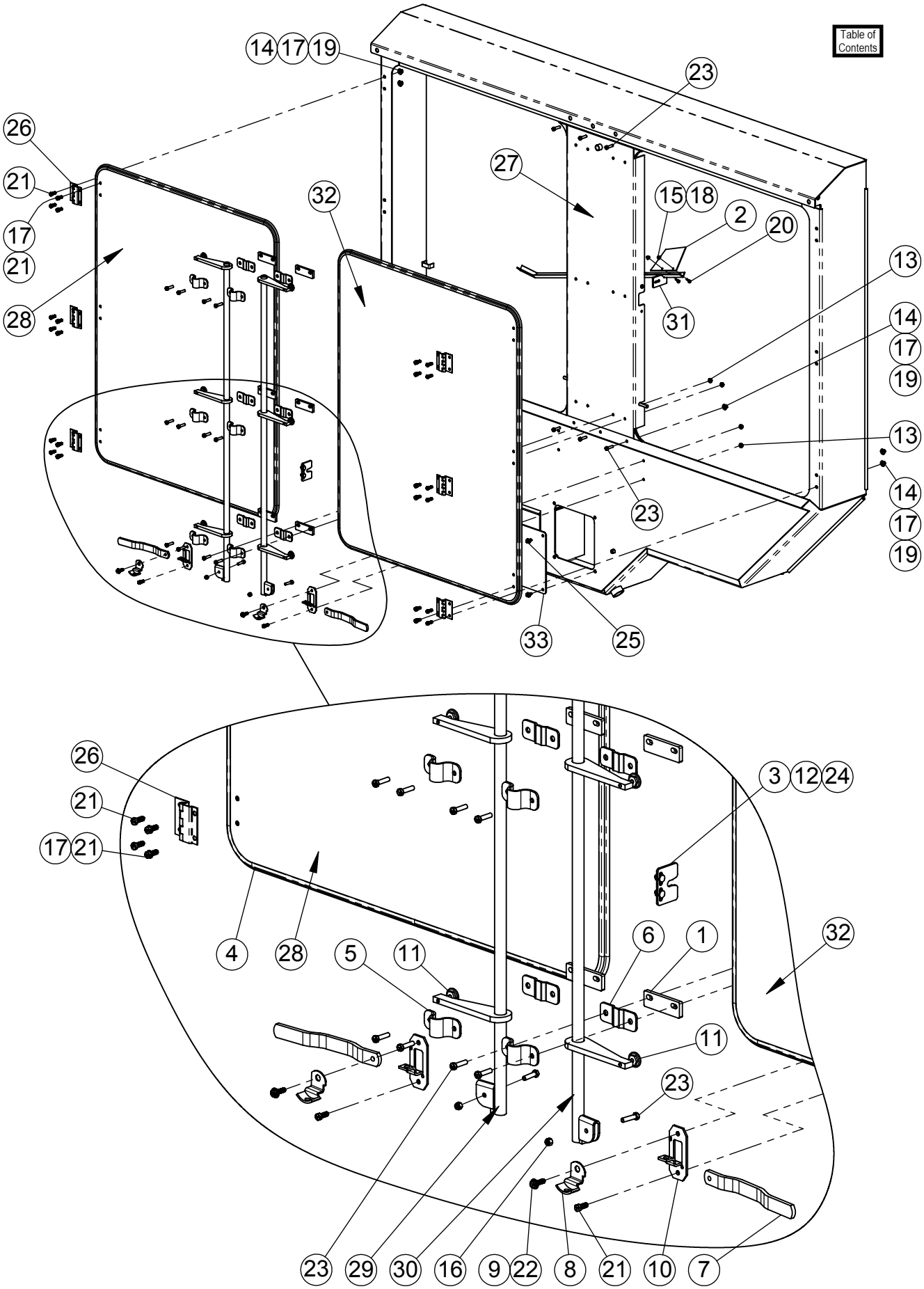

920-18 OIL BATH DOOR GROUP ASSEMBLY

ITEM #	PART #	DESCRIPTION	QTY.
1	189503	CAM ROD SPACER	6
2	190472	OIL WIPER	1
3	190713	OB DOOR SUPPORT PLATE - WIDE	2
4	351056	RUBBER BULB SEAL 5/32"	36
5	370316	CAM LOCK TOP PLATE	6
6	370317	CAM LOCK BOTTOM PLATE	6
7	370319	CAM LOCK HANDLE	2
8	370320	HANDLES CAM LOCK	2
9	370321	CAM LOCK BUSHING	2
10	370322	HANDLE STOP	2
11	370323	LEVELING PAD	6
12	400106	HEX NUT, 5/16"-18 SER. FLANGE #5 PLTD	4
13	400107	HEX NUT, 3/8"-16 SERRATED FLANGE #5	16
14	400206	HEX NUT 3/8"-16 #5 PLTD	18
15	401104	HEX NUT, NYLOC 1/4"-20 #5 PLTD	2
16	401106	HEX NUT, 3/8"-16 NYLOC #5 PLTD	2
17	402006	WASHER SPRING LOCK 3/8" MED PLTD	30
18	402404	FLAT WASHER 1/4" PLTD	2
19	402406	FLAT WASHER 3/8" PLTD	18
20	405602	HHCS 1/4" -20 x 3/4" USS #5 PLTD.	2
21	405653	HHCS 3/8"-16 x 1" #5 PLTD	26
22	405654	HHCS 3/8"-16 x 1-1/4" #5 PLTD	2
23	405655	HHCS 3/8"-16 x 1 1/2" #5 PLTD	20
24	407020	CHCS 5/16"-18 x 3/4" #5 PLTD	4
25	407900	HHCS 3/8"-16 x 3/4" SERRATED #5 PLTD	3
26	410219	HINGE, OFFSET,3 1/2" SQ	6
27	872593	920 OIL BATH CENTER CHANNEL	1
28	872594	920 OIL BATH DOOR WA LH SIDE	1
29	872595	920 LEFT CAM ROD WA	1
30	872596	920 RIGHT CAM ROD WA	1
31	872909	920 CHAIN OILER W/A (LH)	1
32	872986	920 OIL BATH DOOR WA RH SIDE	1
33	192347	INSPECTION HOLE COVER 12-1/4" SQ	1

920-18 TRUCK LOAD CELL SCALE FRAME ASSEMBLY

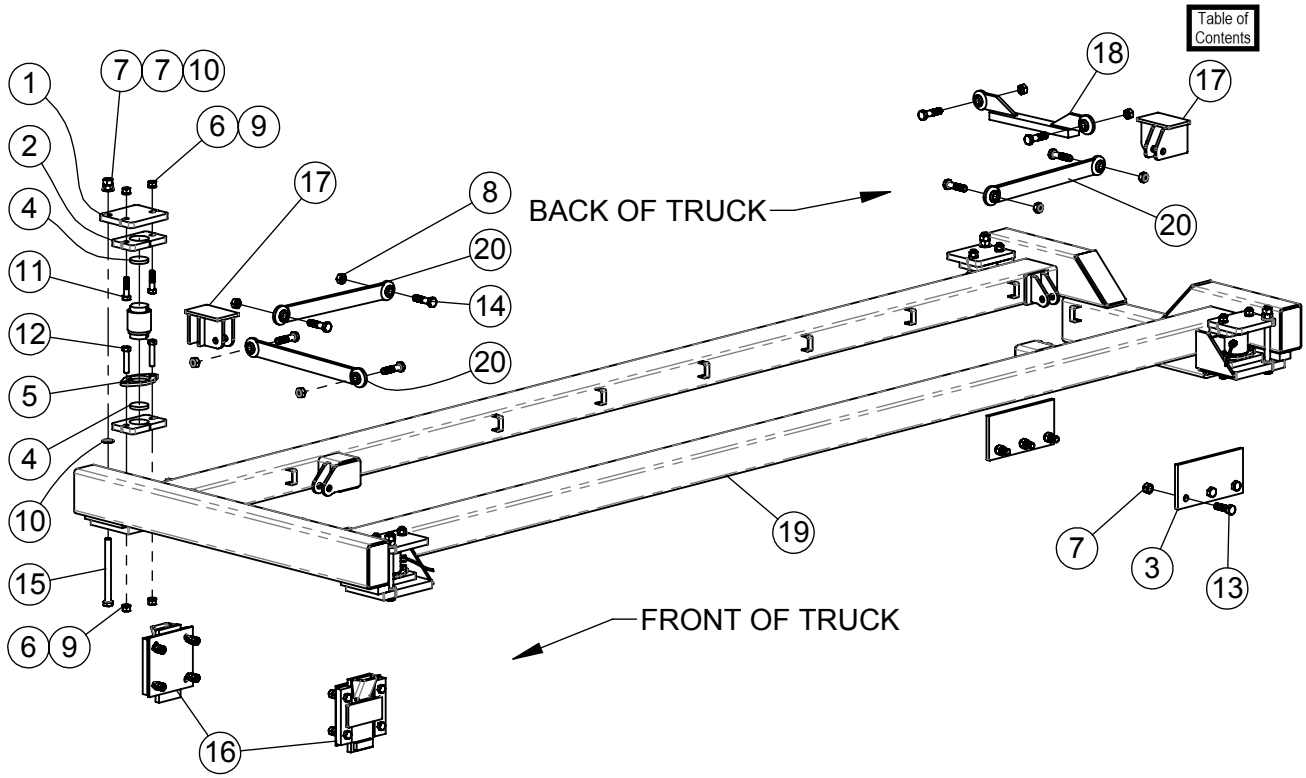

REF #	PART #	DESCRIPTION	QTY.
1	182881	SCALE MOUNT MIXER PLATE	4
2	182915	LOAD CELL CAGE PLATE	8
3	185525	BRACKET, TRUCK FRAME 12"	2
4	185997	SCALE PAD	8
5	190075	DIGI-STAR LOAD CELL SUPPORT PT	4
6	400210	HEX NUT 5/8"-11 #5 PLTD	16
7	400212	HEX NUT 3/4"-10 #5 PLTD	14
8	400912	HEX CROWN LOCK NUT 3/4"-10 #5 PLTD	8
9	402010	SPRING LOCK WASHER 5/8" PLTD	16
10	402512	FLAT WASHER 3/4" SAE	8
11	405756	HHCS, 5/8"-11 x 2-1/2" #5 PLTD	8
12	405758	HHCS 5/8"-11 x 3" #5 PLTD	8
13	405781	HHCS 3/4"-10 x 2-1/2" #5 PLTD	6
14	405783	HHCS 3/4-10 x 3" #5 PLTD	8
15	405798	HHCS #5 PLTD 3/4-10 x 8-1/2	4
16	780127	SCALE FRAME FLOATER KIT	1
17	870519	MIXER SCALE CHECK W.A.	2
18	872053	OFFSET CHECK ROD W.A.	1
19	872572	920 SCALE FRAME W.A.	1
20	874066	SCALE CHECK ROD WA	3

920-18 STATIONARY SCALE FRAME ASSEMBLY

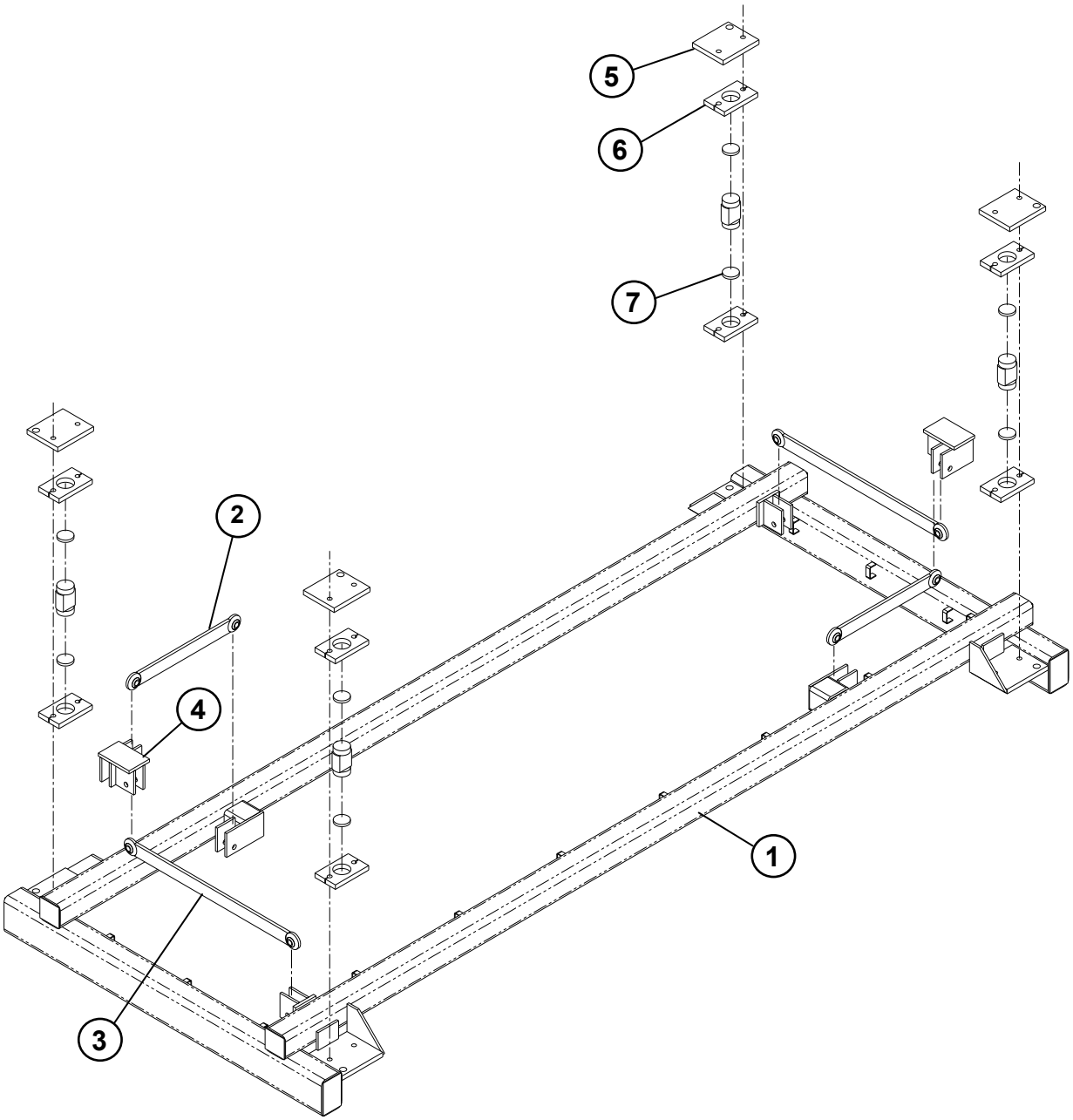

ITEM #	PART NO	DESCRIPTION	QTY
1	874141	920-18 STATIONARY SCALE FRAME WELDMENT	1
2	874066	SCALE CHECK ROD 19-1/2”	2
3	874140	OFFSET CHECK ROD 39-1/2”	2
4	870519	MIXER SCALE CHECK WELDMENT	2
5	182881	SCALE MOUNT MIXER PLATE	4
6	182915	LOADCELL CAGE PLATE	8
7	185977	SCALE PAD	8

920-18 TRAILER LOADCELL ASSEMBLY

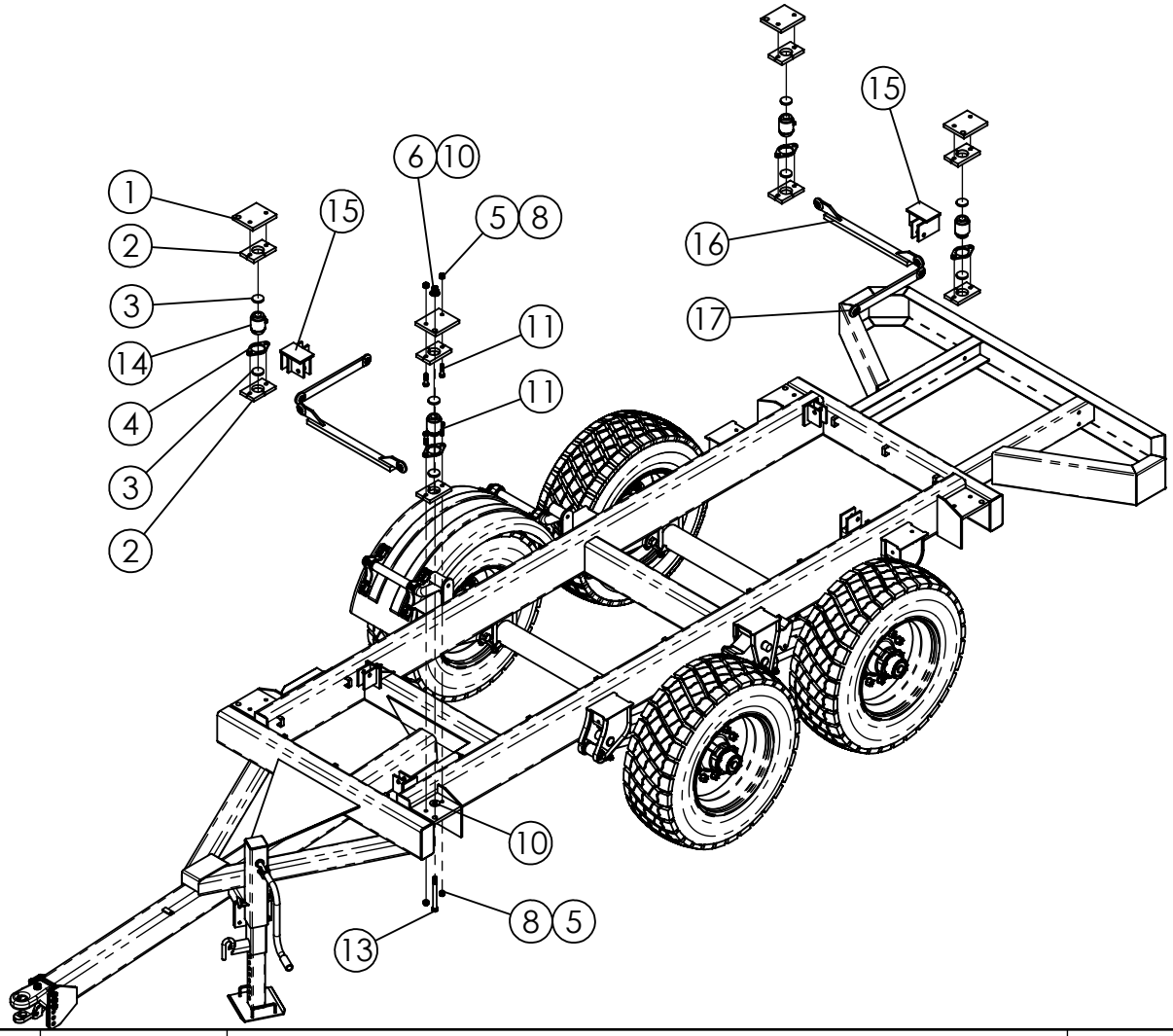

ITEM #	PART #	DESCRIPTION	QTY.
1	182881	SCALE MOUNT MIXER PLATE	4
2	182915	LOAD CELL CAGE PLATE	8
3	185997	SCALE PAD	8
4	190075	DIGI-STAR LOAD CELL SUPPORT PT (10MM)	4
5	400210	HEX NUT 5/8"-11 #5 PLTD	4
6	400212	HEX NUT 3/4"-10 #5 PLTD	2
7	400912	HEX CROWN LOCK NUT 3/4"-10 #5 PLTD	1
8	402010	SPRING LOCK WASHER 5/8" PLTD	4
9	402012	SPLIT LOCK WASHER 3/4" PLTD	1
10	402412	FLAT WASHER 3/4"	2
11	405756	5/8"-11 x 2-1/2" HEX BOLT #5 PLTD	4
12	405783	3/4"-10 x 3" #5 PLTD HHCS	1
13	405795	HHCS #5 PLTD, 3/4"-10 x 8"	1
14	450744	LOAD CELL 1/10 OF 1% 50K CT-TC	4
15	870519	MIXER SCALE CHECK W.A.	2
16	872390	OFFSET CHECK ROD WA	2
17	874066	SCALE CHECK ROD WA	2

920 TANDEM TRAILER ASSEMBLY

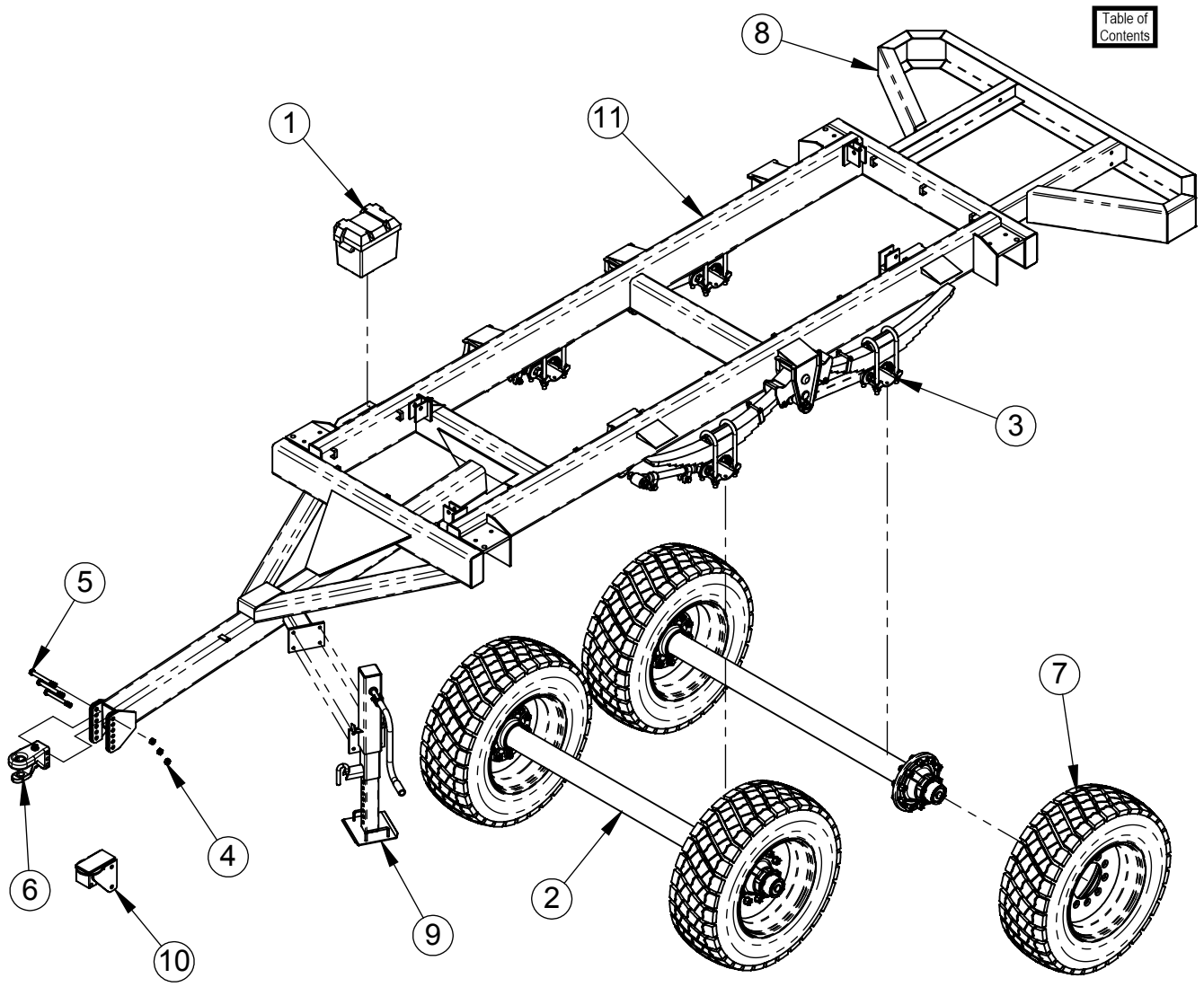

ITEM #	PART #	DESCRIPTION	QTY
1	357400	BATTERY BOX W/STRAP	1
2	372077	AXLE ASSEMBLY 77" WT	2
3	372188	TANDEM SUSPENSION KIT, 44000lb	1
4	400912	HEX CTRLOC NUT 3/4"-10 #5 PLTD	3
5	405793	HHCS 3/4"-10 x 7" #5 PLTD	3
6	651024	PERFECT HITCH KIT CAT 3 (PPI-237VR)	1
7	781209	TIRE & WHEEL ASSY 15 x 22.5	4
8	870568	TRUCK BUMPER 8"	1
9	872090	DROP LEG JACK 9T	1
10	872976	BALL HITCH WA - 3" **(OPTIONAL)**	1
11	872703	920 TRAILER **(STANDARD - CLEVIS TYPE)**	1
	872977	920 TRAILER **(OPTIONAL -BALL HITCH TYPE)**	1

920-18 TRAILER 10-BOLT HUB ASSEMBLY (20,000LB) #750110

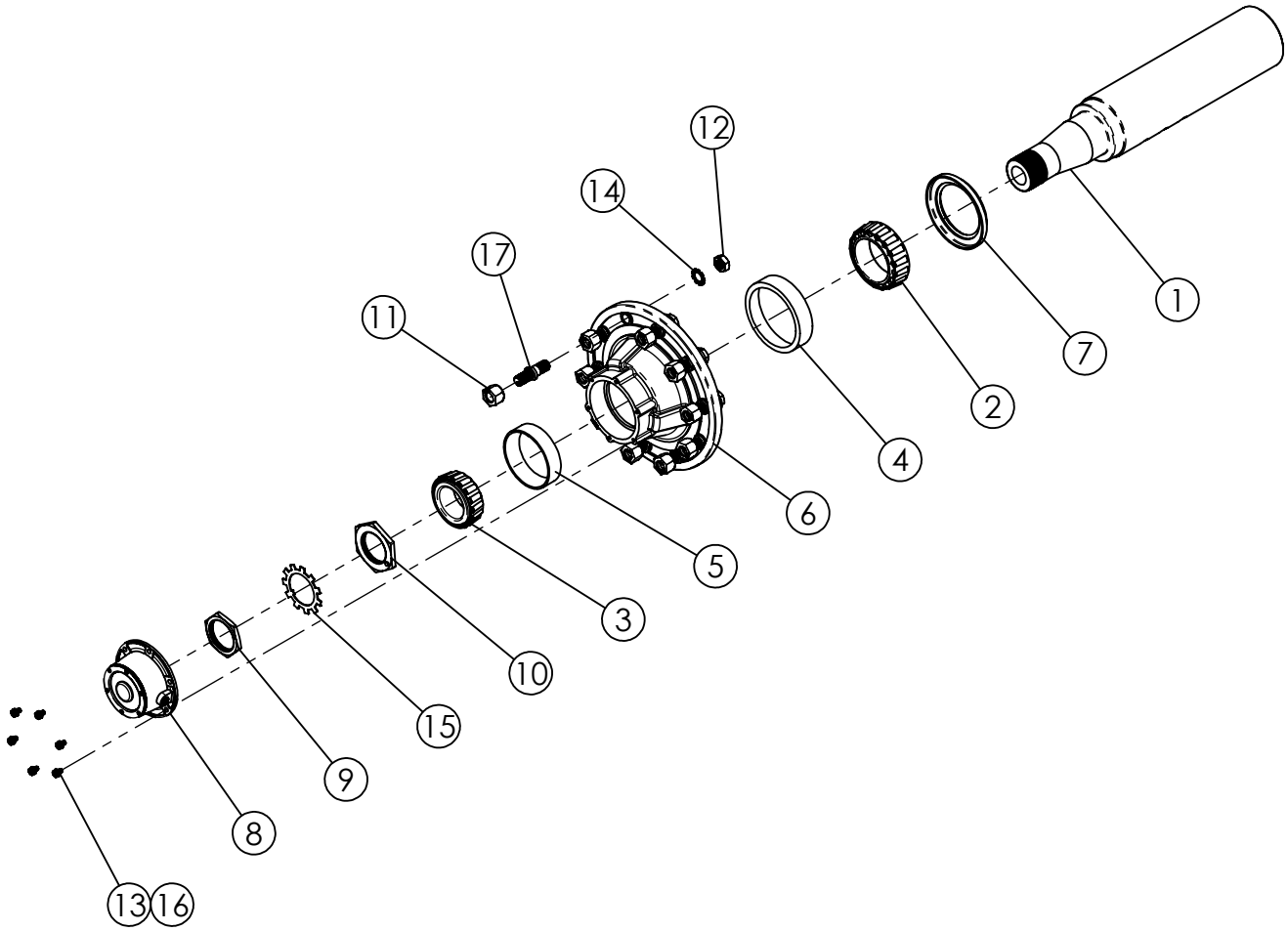

ITEM #	PART #	DESCRIPTION	QTY.
1	184614	SPINDLE, 20,000#	1
2	342213	INNER BEARING 3.543" BORE	1
3	342214	OUTSIDE BEARING 2-5/8" OD	1
4	342215	INNER BEARING RACE 5.787"OD	1
5	342216	OUTSIDE BEARING RACE 4-13/16" OD	1
6	372212	10-BOLT HUB ASSEMBLY, (RIGHT HAND) 20,000#	1
7	372304	SEAL 4-3/8" BORE	1
8	372309	DUST CAP, 20,000# HUB	1
9	400033	OUTER NUT, 3/8" THICK x 2-5/8" ID	1
10	400034	INNER NUT, 3/8" THICK x 2-5/8" ID	1
11	400102	LUG NUT, BUDD RH 3/4"-16	10
12	400712	HEX JAM NUT 3/4"-16	10
13	402005	WASHER 5/16", SPRING LOCK, MED PLTD	6
14	402112	LOCK WASHER, EXTERNAL STAR 3/4"	10
15	402904	LOCKING WASHER 1/4" THICK x 2-41/64" ID	1
16	405625	HHCS 5/16"-18 x 1/2" #5 PLTD	6
17	407724	STUD BOLT RH 3/4"-16	10

920-18 TRUCK & TRAILER FENDERS & MUD FLAPS

Table of Contents

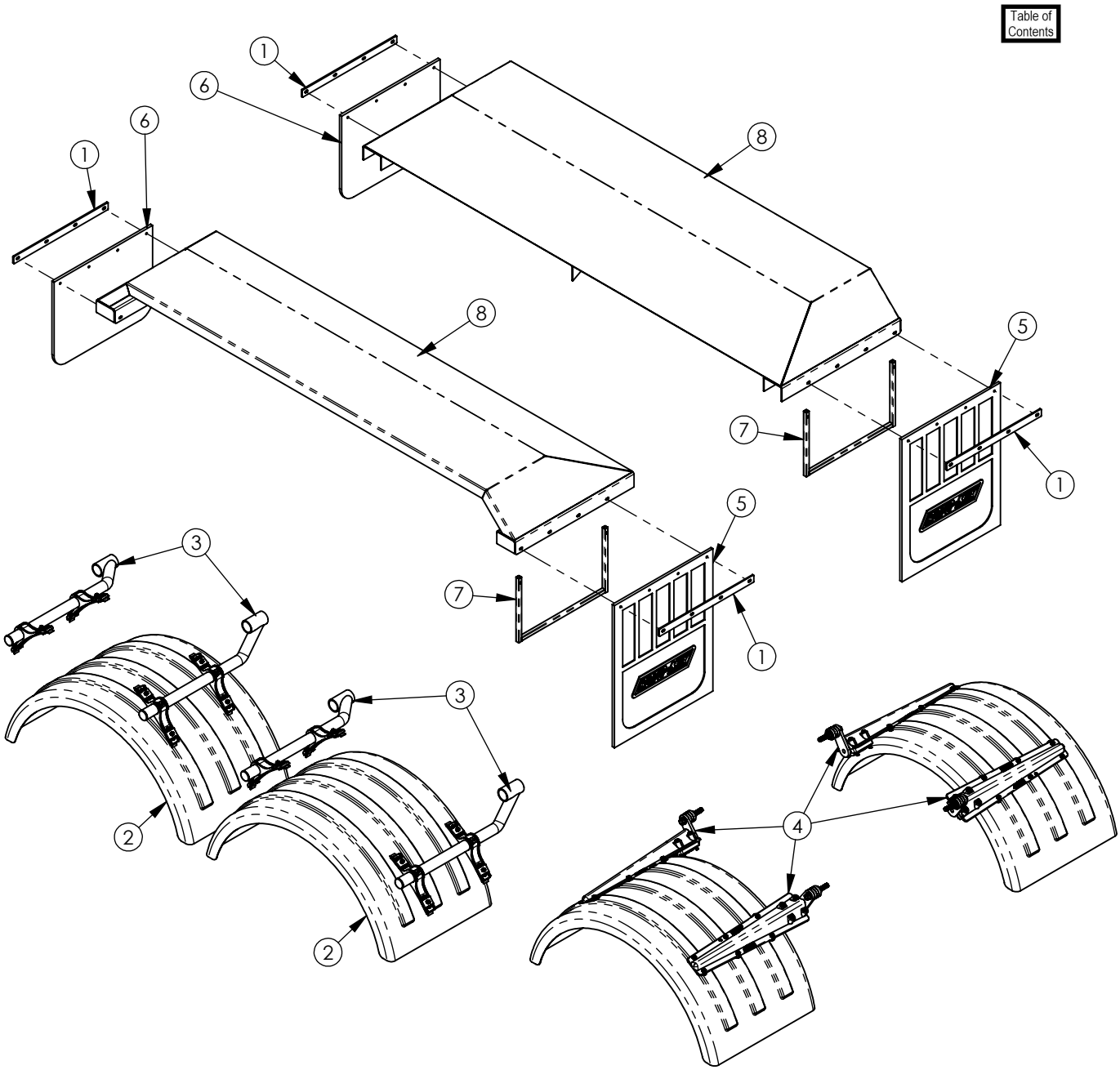

REF #	PART #	DESCRIPTION	QTY
1	183087	MUD FLAP STRAP	4
2	354391	POLY FENDER	3
3	354392	POLY FENDER TUBING MOUNT KIT (2 per kit)	2
4	354393	POLY FENDER TAPER BRACKET KIT (4 per kit)	1
5	370200	ROTO-MIX MUD FLAP 24" x 30"	2
6	370202	ROTO-MIX MUD FLAP 24" x 18-1/2"	2
7	872120	MUD FLAP BRACKET WA	2
8	872130	TANDEM FENDER WA	2

920-18 POLY FENDERS

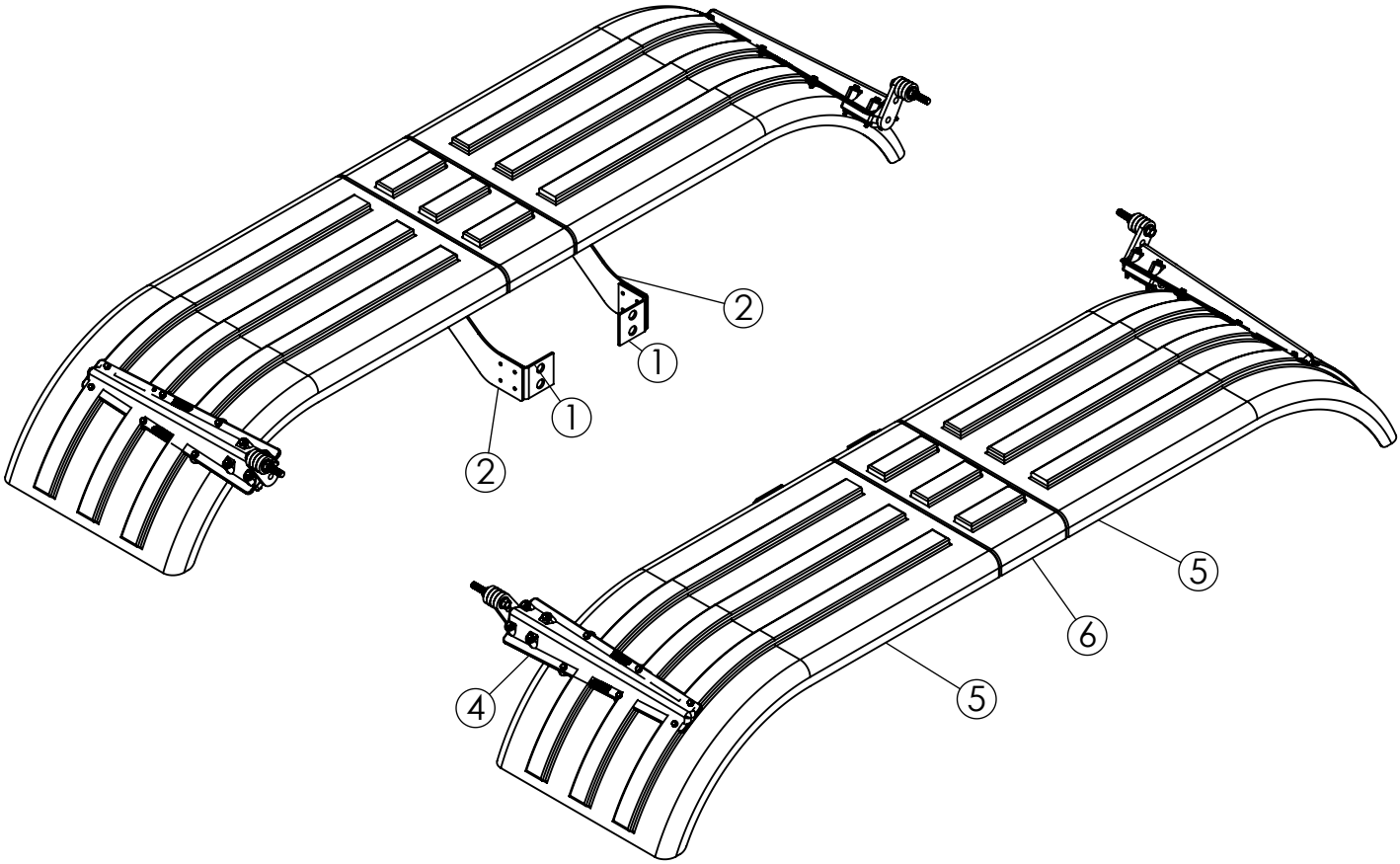

ITEM#	PART#	DESCRIPTION	QTY.
1	192730	BRACKET, POLY FENDER SUPPORT	4
2	192731	SUPPORT, POLY FENDER TANDEM	4
3	192732	SLIDE, POLY FENDER TANDEM SUPPORT	4
4	354393	POLY FENDER TAPER BRACKET KIT (4 Brkt's per Kit)	1
5	354394	POLY FENDER TANDEM KIT #MIN4000B (4 Fenders per Kit)	1
6	354395	POLY FENDER EXTENSION, 10" #PM10EXTB	2

920-18 CROSS OVER SUPPPORT ASSEMBLY & HAY SHEAR TUBE ASSEMBLY

Table of Contents

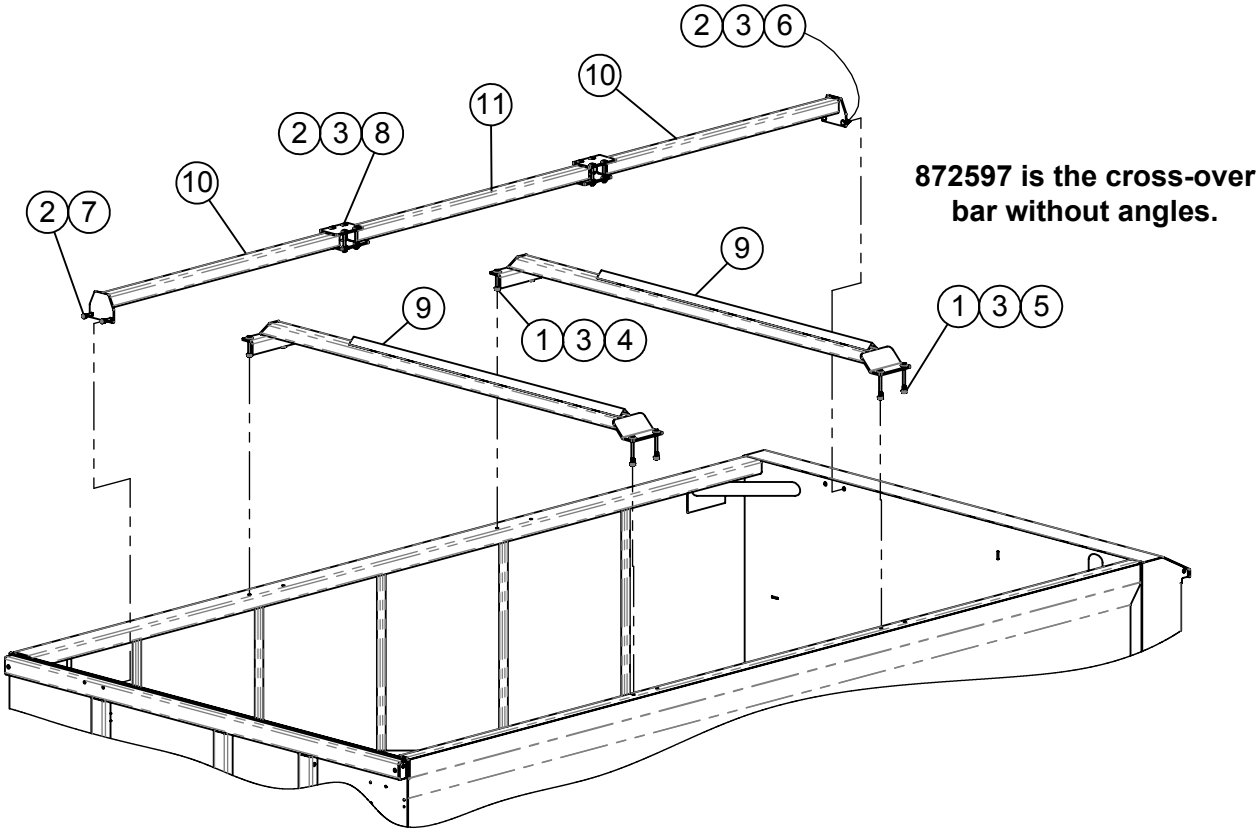

980113 - 920 CROSS-OVER BAR KIT
980162 - 920 CROSS-OVER BAR KIT W/ANGLES
980091 - 920 HAY SHEAR TUBE ASSEMBLY

ITEM #	PART #	DESCRIPTION	QTY.
1	400114	HEX NUT, 1/2-13 SERRATED FLANGE #5	8
2	400908	HEX CROWN LOCNUT 1/2"-13 #9	12
3	402408	WASHER, FLAT 1/2" MED PLTD	18
4	405713	HHCS 1/2"-13 x 4" #5 PLTD	4
5	405717	HHCS 1/2"-13 x 6" #5 PLTD	4
6	407103	CHCS 1/2"-13 x 1-3/4" #5 PLTD	2
7	407108	1/2"-13 X 3" CARRIAGE BOLT	2
8	407113	CHCS 1/2"-13 x 4-1/2" #5 PLTD	8
9	871395	920 CROSS-OVER BAR W/ ANGLE	2
10	873162	920 HAY SHEAR TUBE END 69-1/2"	2
11	873163	920 HAY SHEAR TUBE CTR 69-1/2"	1

920-18 ROTO-HAY PROCESSOR ASSEMBLY

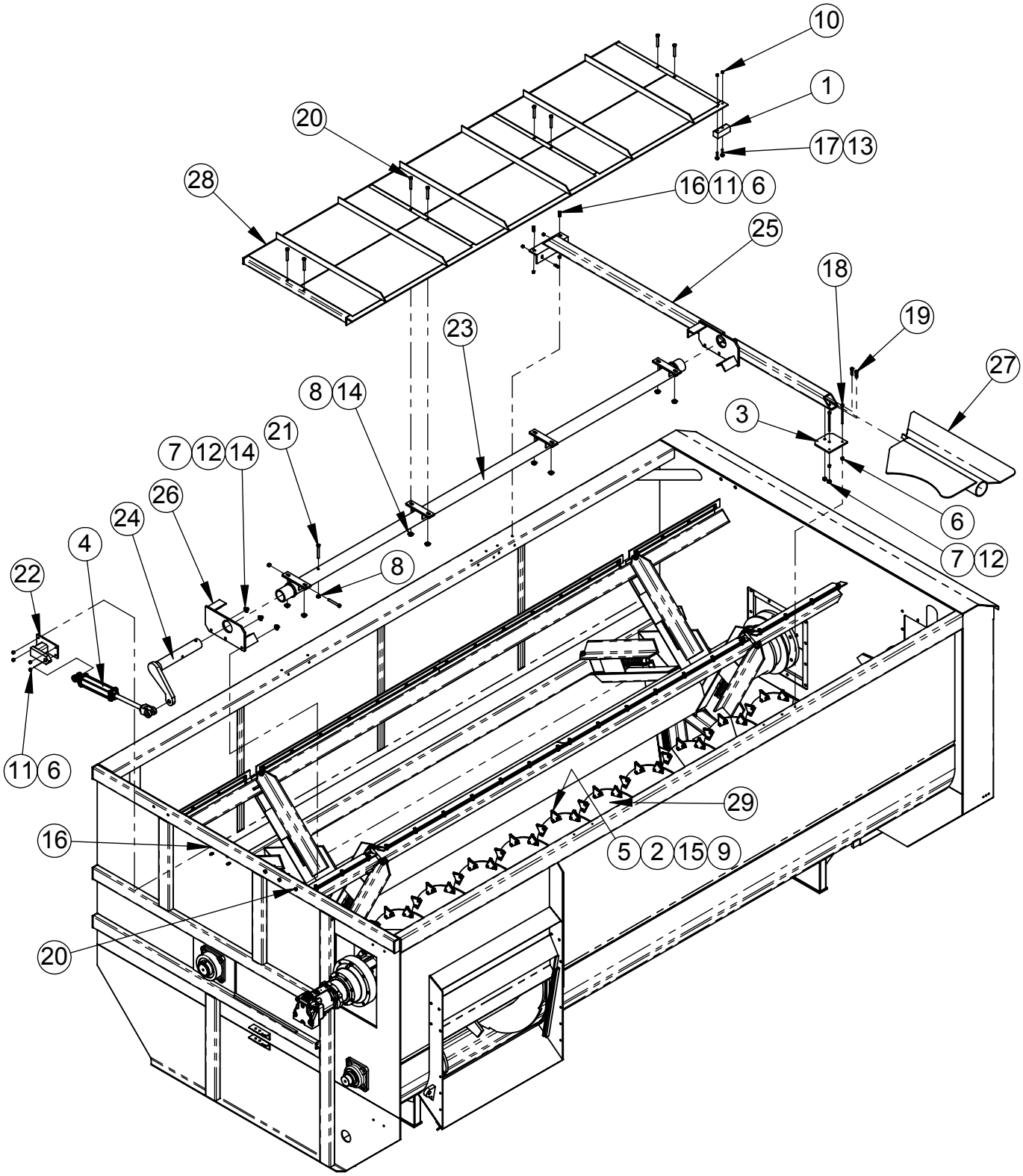

920-18 ROTO-HAY PROCESSOR ASSEMBLY

ITEM #	PART #	DESCRIPTION	QTY
1	150198	BAFFLE PLUNGER 4-3/4"	1
2	150223	KNIFE BACK UP PLATE	AN
3	189587	920 HAY PAN FLANGE 7"	1
4	364055	HYDRAULIC CYLINDER ASSY 2" x 8"	1
5	385002	SICKLE SECTION, HARD SURFACED, 5/16"	AN
6	400206	HEX NUT 3/8"-16 #5 PLTD	10
7	400208	HEX NUT 1/2"-13 #5 PLTD	5
8	400908	HEX CENTER LOCKNUT 1/2"-13	10
9	401105	HEX NUT, 5/16"-18 NYLOC #5 PLTD	AN
10	401106	HEX NUT, 3/8"-16 NYLOC #5 PLTD	2
11	402006	SPRING LOCK WASHER 3/8" MED PLTD	11
12	402008	SPRING LOCK WASHER 1/2" PLTD	5
13	402406	FLAT WASHER 3/8" PLTD	2
14	402408	FLAT WASHER 1/2" MED PLTD	11
15	405629	HHCS 5/16"-18 x 1-1/4" #5 PLTD	AN
16	405654	HHCS 3/8"-16 x 1-1/4" #5 PLTD	8
17	405657	3/8" - 16 x 2" HHCS #5 PLTD	2
18	405669	3/8" - 16 x 6" HHCS #5 PLTD.	2
19	405704	HHCS 1/2"-13 x 1-3/4" #5 PLTD	2
20	405711	HHCS #5 PLTD, 1/2-13 x 3-1/2	11
21	405713	1/2"-13 x 4" HHCS	2
22	850060	HAY PAN HYD CYL BRKT WA	1
23	872712	920 HAY PAN TUBE WA 154-1/8"	1
24	872713	920 HAY PAN LEVER ARM 16-1/2"	1
25	874196	920 REAR HAY PAN BAR	1
26	874197	920 FRONT HAY PAN BRG & STOP WA	1
27	874198	920 HAY PAN BAFFLE WA	1
28	874200	920 HAY PAN WA	1
29	874201	920 24" TOP AUGER WA, WITH KNIFE HOLES	1

920-18 DRIVE ASSEMBLY

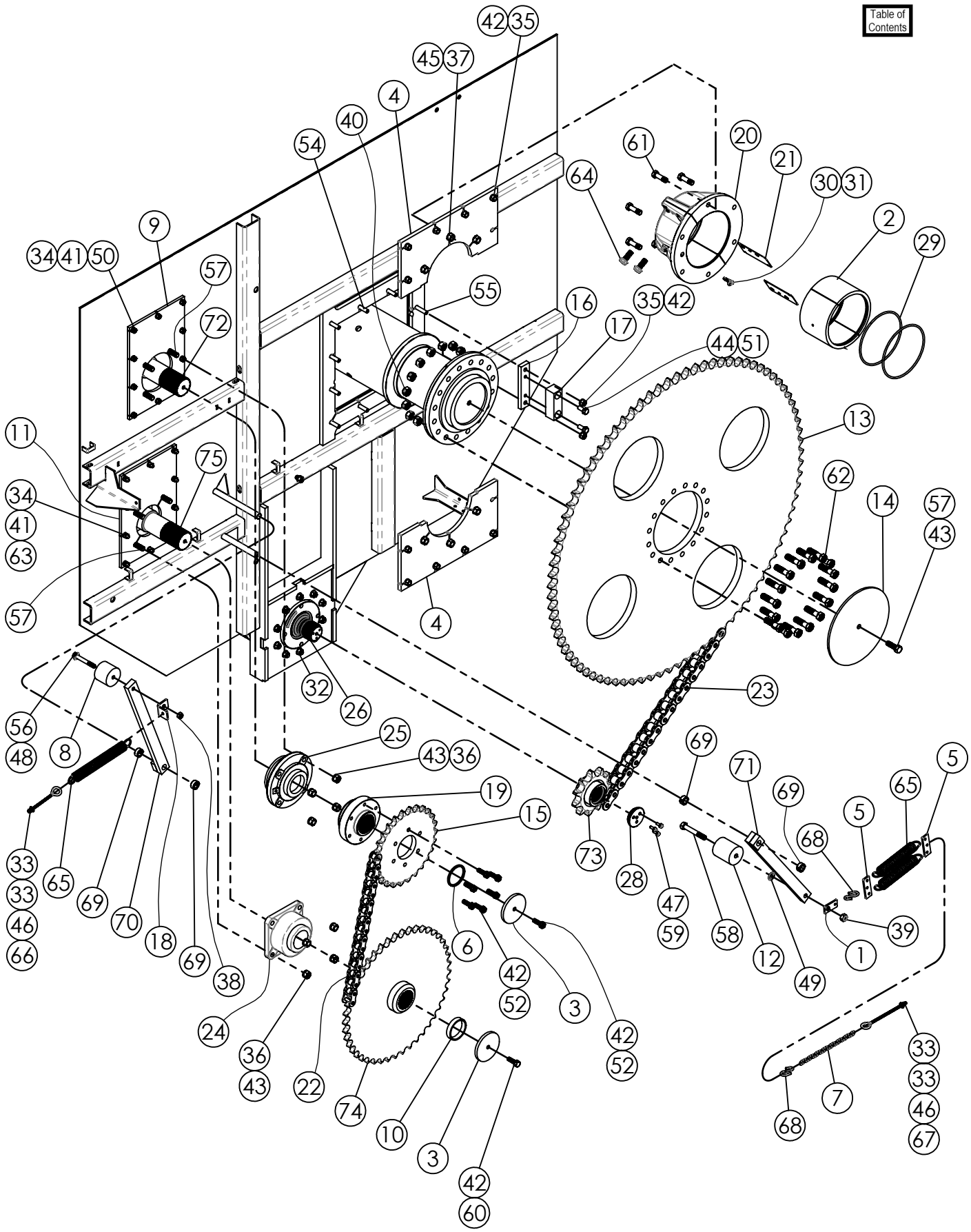

920-18 DRIVE ASSEMBLY

ITEM #	PART #	DESCRIPTION	QTY
1	181198	PULL TAB 3/4"	1
2	185139	9-3/4" NYLATRON BEARING INSERT	1
3	185261	WASHER 5 1/2" O.D.	2
4	185270	ROTOR BEARING PLATE	2
5	185290	SPRING PULL BAR	2
6	185317	SHAFT SPACER 3 1/2" x 1/4"	1
7	185488	CHAIN-2/0 PASSING LINK	1
8	185582	IDLER BLOCK #100 x 2 7/8"	1
9	185871	620/920 TOP AUGER BEARING PLATE	1
10	188255	SHAFT SPACER 3-1/2" x 13/16"L	1
11	189412	920 BTM AUGER BEARING PLATE	1
12	189472	180 IDLER BLOCK	1
13	189481	SPROCKET, 180A85	1
	190477	SPROCKET 180A102 (HEAVY ROTOR DRIVE)	1
14	189580	ROTOR SPROCKET DISC 14-3/4"	1
15	190478	SPROCKET, 140A26H 4.505" BORE	1
	190386	SPROCKET, 140A24H x 4.505" (BAR ROTOR)	1
16	190824	BLOCK PLATE	1
17	190827	STOP BLOCK	1
18	190836	FORMED IDLER ANGLE	1
19	190974	SPLINED TOP AUGER SPROCKET HUB (4")	1
20	192560	BEARING HOUSING, NYLATRON, SAWED	1
21	192567	BEARING SPACER	2
22	321471	ROLLER CHAIN #140 x 71 PITCH COMPLETE	1
23	321802	ROLLER CHAIN #180 x 101 PITCH COMPLETE	1
	321804	ROLLER CHAIN #180 x 112P (HEAVY ROTOR DRIVE)	1
24	342056	BEARING, 3-1/2", 4-BOLT FLANGE	1
25	342156	BEARING, 3-1/2", ROUND FLANGE	1
26	344160	GEARBOX, BREVINI	1
27	344169	GEARBOX, AUBURN E2488-000-03	1
28	192653	SHAFT COVER RDF090	1
29	351922	O-RING 8"OD x 7-1/2" ID BUNA N	2
30	368003	ELBOW 90 1/8FPx1/8FP	1
31	368731	NIPPLE HEX 1/8MPx1/8MP	1
32	400129	FLANGE NUT, 5/8"-18 SERRATED	10
33	400206	HEX NUT 3/8"-16 #5 PLTD	4
34	400208	HEX NUT 1/2"-13 #5 PLTD	20
35	400210	HEX NUT 5/8"-11 #5 PLTD	13
36	400212	HEX NUT 3/4"-10 #5 PLTD	8
37	400512	HEX NUT 3/4"-16 #8 PLTD	6
38	400910	HEX CROWN LOCNUT, 5/8"-11 #9 PLT	1
39	400912	HEX CROWN LOCK NUT 3/4"-10 #5 PLTD	9
40	401014	HEX CENTER LOCK NUT 7/8"-14 SAE	16
41	402008	SPRING LOCK WASHER 1/2" PLTD	20
42	402010	SPRING LOCK WASHER 5/8" PLTD	21
43	402012	SPRING LOCK WASHER 3/4" PLTD	9
44	402110	LOCK WASHER 5/8" EXTERNAL STAR PLTD	2
45	402112	LOCK WASHER, EXTERNAL STAR 3/4"	6
46	402406	FLAT WASHER 3/8" PLTD	2
47	402506	FLAT WASHER 3/8" SAE PLTD	3
48	402510	FLAT WASHER 5/8" SAE PLTD	1
49	402512	FLAT WASHER 3/4" SAE	1
50	405703	HHCS 1/2"-13 x 1-1/2" #5 PLTD	10
51	405752	HHCS, 5/8"-11 x 1-1/2" #5 PLTD	2
52	405754	HHCS, 5/8"-11 x 2" #5 PLTD	7
53	405756	HHCS, 5/8"-11 x 2-1/2" #5 PLTD	1
54	405758	HHCS 5/8"-11 x 3" #5 PLTD	10
55	405760	HHCS #5 PLTD 5/8"-11 x 3 1/2"	2
56	405763	HHCS 5/8"-11 x 4-1/2" #5 PLTD	1
57	405781	HHCS 3/4"-10 x 2-1/2" #5 PLTD	17
58	405789	HHCS 3/4"-10 x 5" #5 PLTD	1
59	406053	HHCS 3/8"-24 x 1" #5 PLTD	3
60	406454	HHCS 5/8"-11 x 2" #8 PLTD	1
61	406781	HHCS 3/4"-16 x 2 1/2" #8 PLTD	6
62	406793	HHCS 7/8"-14 x 3-1/4"" #8 PLTD	16
63	406930	FHCS 1/2"-13 x 1-3/4" #9 PLTD	10
64	407940	HHCS, 3/4"-16 x 2" FLANGE #8 PLTD	4
65	410012	SPRING PULL 1 3/4" x 7 x .218	3
66	410851	EYE BOLT 3/8" X 6"	1
67	410852	EYE BOLT 3/8" X 8"	1
68	411805	S - HOOK 5/16"	2
69	412416	SET COLLAR 1" PLTD	4
70	872252	IDLER ARM 5/8"BORE, 21 3/4"	1
71	872402	IDLER ARM 3/4" BORE, 21-3/4"	1
72	872579	920 TOP AUGER FLANGE, 3-1/2" SPLINE	1
73	872586	SPROCKET 180C11 3" 36T SPLINED BORE	1
74	872590	SPROCKET 140C45 3-1/2" 24T SPLINED HUB	1
75	873387	BTM AUGER RND DRIVE FLG, 3-1/2" SPLINE	1

ROTOR BEARING ASSEMBLY, CAST OR WELDED

782037 - CAST BEARING USED STARTING IN 2020

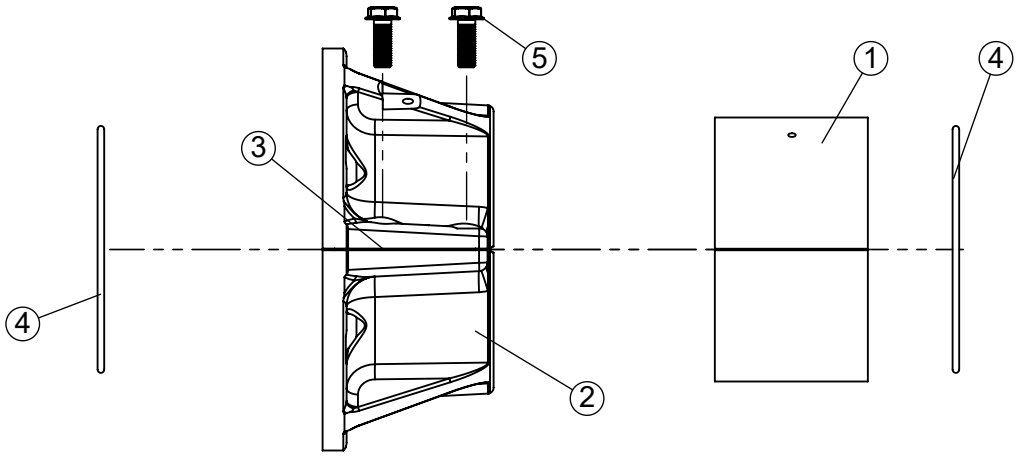

ITEM#	PART#	DESCRIPTION	QTY.
1	185148	NYLATRON BEARING INSERT - CAST BEARING	2
2	192560	BEARING HOUSING, CAST & SAWN	1
3	192567	BEARING SPACER	2
4	351922	.O-RING 8"OD x 7-1/2" ID BUNA N	2
5	407940	HHCS, 3/4"-16 x 2" FLANGE #8 PLTD	4

872037 - WELDED BEARING USED PRIOR TO 2020

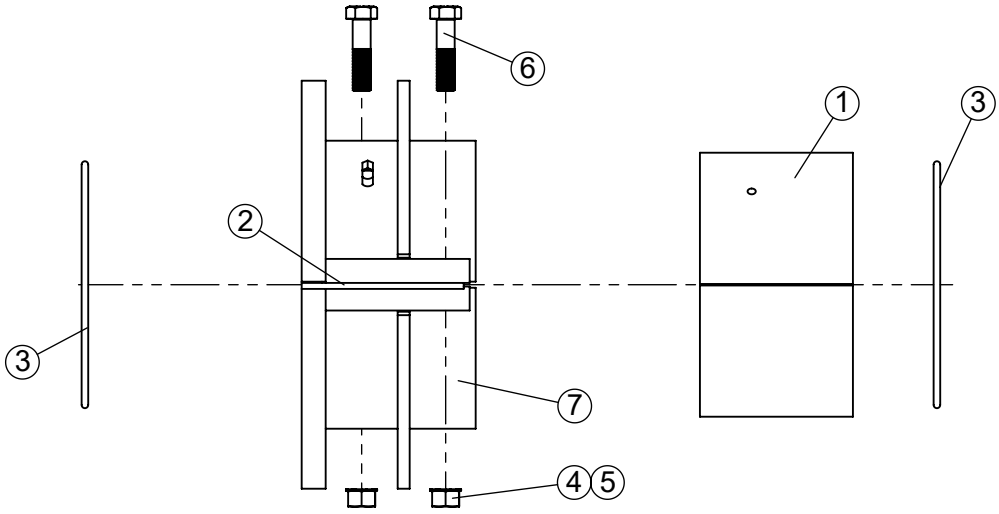

ITEM#	PART#	DESCRIPTION	QTY.
1	185139	NYLATRON BEARING INSERT - WELDED BEARING	2
2	185140	BEARING SPACER	2
3	351922	.O-RING 8"OD x 7-1/2" ID BUNA N	2
4	400312	HEX NUT 3/4"-16 #5 PLTD	4
5	402112	LOCK WASHER, EXTERNAL STAR 3/4"	4
6	406783	HHCS 3/4"-16 x 3" #8 PLTD	4
7	872041	BEARING HOUSING, WELDED ASSEMBLY	1

920-18 TOP AUGER SETUP

***344159 can be made from 344161 & 344238**

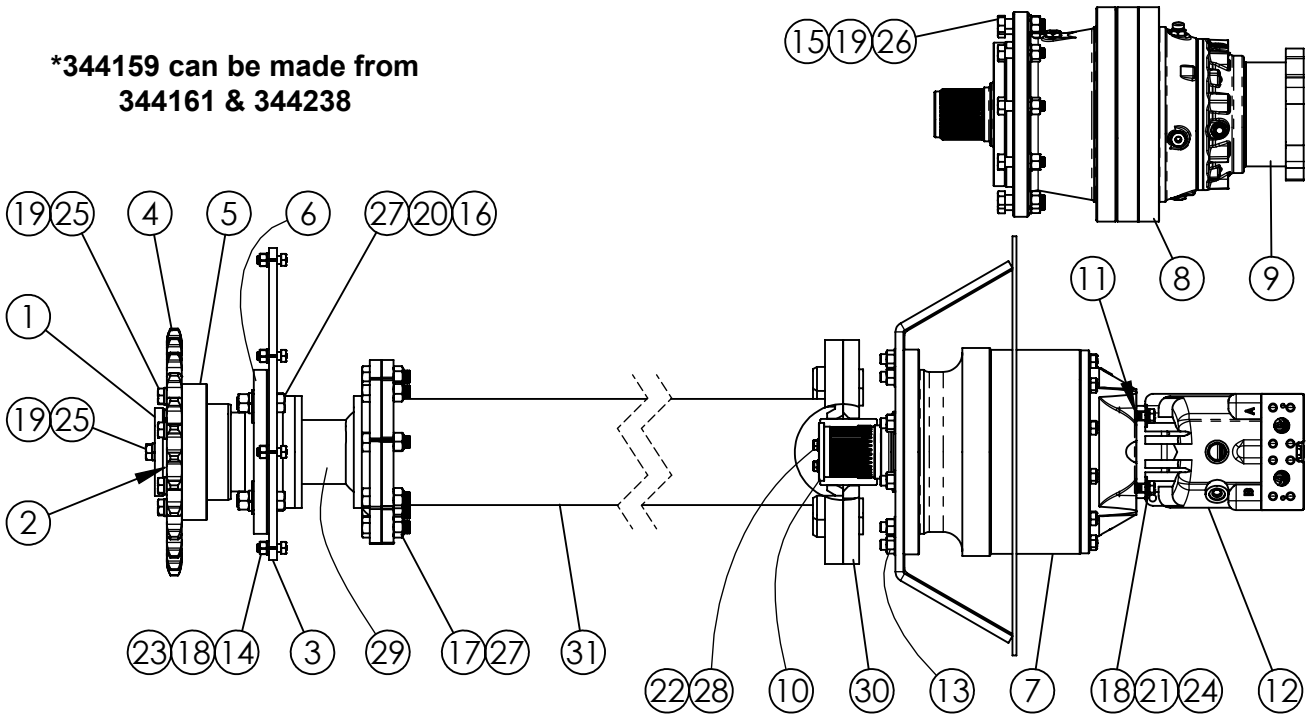

ITEM #	PART #	DESCRIPTION	QTY.
1	185261	WASHER 5 1/2" O.D.	1
2	185317	SHAFT SPACER 3 1/2" x 1/4"	1
3	185871	620/920 TOP AUGER BEARING PLATE	1
4	190478	SPROCKET, 140A26H 4.505" BORE	1
5	190974	SPLINED TOP AUGER SPROCKET HUB (4")	1
6	342156	BEARING, 3-1/2", ROUND FLANGE	1
7	344168	GEARBOX, AUBURN 60003780 **(Truck & Stationary)**	1
8	344159*	GEARBOX, BREVINI **(Truck & Stationary)** **(Includes SAE C Input Adapter)**	1
	344123	GEARBOX, BREVINI **(Trailer Only)**	
9	344238	ADAPTER KIT, "SAE C" FLANGE (MOTOR INPUT)	1
10	192653	SHAFT COVER RDF090	1
11	351921	O-RING 4.987" ID x .103 c/s (5" ID x 3/32")	1
12	360101	HYDRAULIC MOTOR, SUNDSTRAND 100cc	1
13	400129	FLANGE NUT, 5/8"-18 SERRATED	10
14	400208	HEX NUT 1/2"-13 #5 PLTD	10
15	400210	HEX NUT 5/8"-11 #5 PLTD	10
16	400212	HEX NUT 3/4"-10 #5 PLTD	4
17	400912	HEX CROWN LOCK NUT 3/4"-10 #5 PLTD	8
18	402008	SPRING LOCK WASHER 1/2" PLTD	14
19	402010	SPRING LOCK WASHER 5/8" PLTD	17
20	402012	SPRING LOCK WASHER 3/4" PLTD	4
21	402408	WASHER, FLAT 1/2" MED PLTD	4
22	402506	FLAT WASHER 3/8" SAE PLTD	3
23	405703	HHCS 1/2"-13 x 1-1/2" #5 PLTD	10
24	405704	HHCS 1/2"-13 x 1-3/4" #5 PLTD	4
25	405754	HHCS, 5/8"-11 x 2" #5 PLTD	7
26	405756	HHCS, 5/8"-11 x 2-1/2" #5 PLTD	10
27	405781	HHCS 3/4"-10 x 2-1/2" #5 PLTD	12
28	406053	HHCS 3/8"-24 x 1" #5 PLTD	3
29	872579	920 TOP AUGER FLANGE, 3-1/2" SPLINE	1
30	872911	AUGER 14" DR FLANGE WA Before Serial #820532540	1
31	872913	920 HVY 24" TOP AUGER WA Before Serial #820532540	1

920-18 ROTOR ASSEMBLY SETUP

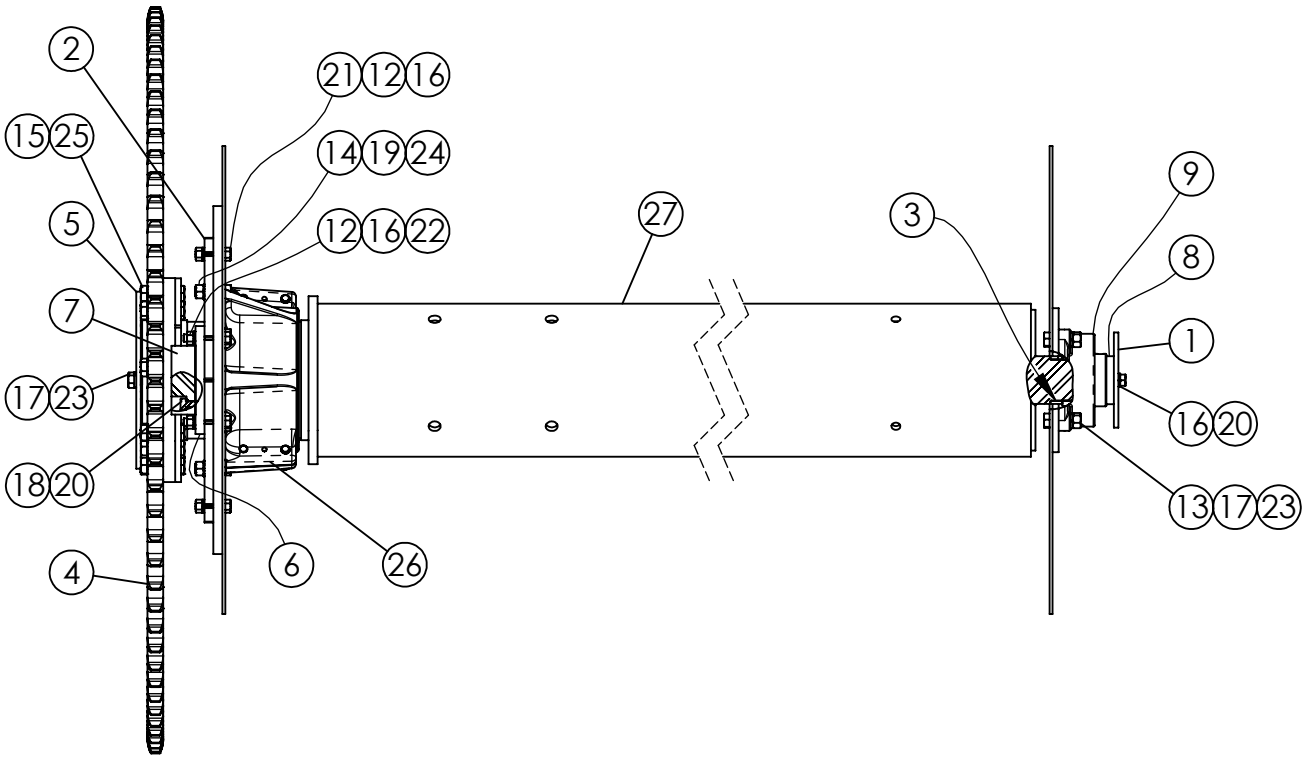

ITEM #	PART #	DESCRIPTION	QTY.
1	185258	ROTOR PLATE INDICATOR, 15/16" OD	1
2	185270	ROTOR BEARING PLATE	2
3	185287	SHAFT SPACER, 3 1/2" x 1"	1
4	189481	SPROCKET, 180A85	1
5	189580	ROTOR SPROCKET DISC 14-3/4"	1
6	190824	BLOCK PLATE	1
7	190827	STOP BLOCK	1
8	191969	SHAFT SPACER, 5/8" x 3-1/2" ID	1
9	340555	4-BOLT-FLANGE BEARING 3-7/16"	1
10	368003	ELBOW 90 1/8FPx1/8FP	1
11	368731	NIPPLE HEX 1/8MPx1/8MP	1
12	400210	HEX NUT 5/8"-11 #5 PLTD	12
13	400212	HEX NUT 3/4"-10 #5 PLTD	4
14	400512	HEX NUT 3/4"-16 #8 PLTD	6
15	401014	HEX CENTER LOCK NUT 7/8"-14 SAE	8
16	402010	SPRING LOCK WASHER 5/8" PLTD	13
17	402012	SPRING LOCK WASHER 3/4" PLTD	5
18	402110	LOCK WASHER 5/8" EXTERNAL STAR PLTD	2
19	402112	LOCK WASHER, EXTERNAL STAR 3/4"	6
20	405752	HHCS, 5/8"-11 x 1-1/2" #5 PLTD	3
21	405756	HHCS, 5/8"-11 x 2-1/2" #5 PLTD	10
22	405760	HHCS 5/8"-11 x 3 1/2" #5 PLTD	2
23	405781	HHCS 3/4"-10 x 2-1/2" #5 PLTD	5
24	406781	HHCS 3/4"-16 x 2 1/2" #8 PLTD	6
25	406792	HHCS 7/8"-14 x 3" #8 PLTD	8
26	782037	NYLATRON CAST BEARING ASSY	1
27	872940	920-18 STAGGERED ROTOR GEN 2 (Shown without Arms)	1

920-18 BOTTOM AUGER SETUP

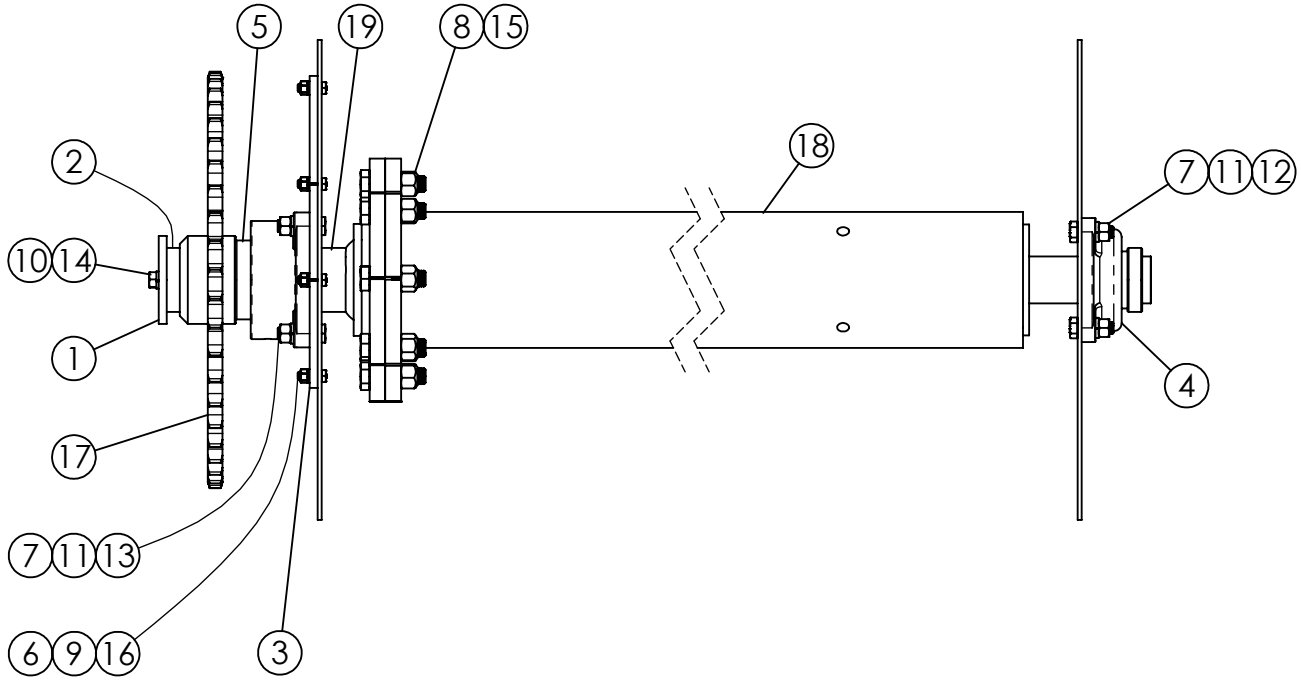

ITEM #	PART #	DESCRIPTION	QTY.
1	185261	WASHER 5 1/2" O.D.	1
2	188255	SHAFT SPACER 3-1/2" x 13/16"L	1
3	189412	920 BTM AUGER BEARING PLATE	1
4	340447	BEARING, 4-BOLT-FLANGE, 2-15/16"	1
5	342056	BEARING, 3-1/2", 4-BOLT FLANGE	1
6	400208	HEX NUT 1/2"-13 #5 PLTD	10
7	400212	HEX NUT 3/4"-10 #5 PLTD	8
8	400916	HEX CROWN LOCKNUT, 1"-8 #5 PLTD	8
9	402008	SPRING LOCK WASHER 1/2" PLTD	10
10	402010	SPRING LOCK WASHER 5/8" PLTD	1
11	402012	SPRING LOCK WASHER 3/4" PLTD	8
12	405780	HHCS 3/4"-10 x 2-1/4" #5 PLTD	4
13	405781	HHCS 3/4"-10 x 2-1/2" #5 PLTD	4
14	406454	HHCS 5/8"-11 x 2" #8 PLTD	1
15	406526	HHCS #8 Pltd 1"-8 x 3 1/2"	8
16	406930	FHCS 1/2"-13 x 1-3/4" #9 PLTD	10
17	872590	SPROCKET 140C45 3-1/2" 24T SPLINED HUB	1
18	872735	920 HVY BTM AUGER,(NO FLIGHTING SHOWN)	1
19	873387	BTM AUGER RND DRIVE FLG, 3-1/2" SPLINE	1

920-18 DRIVE ASSEMBLY DRIVE LINE SETUP

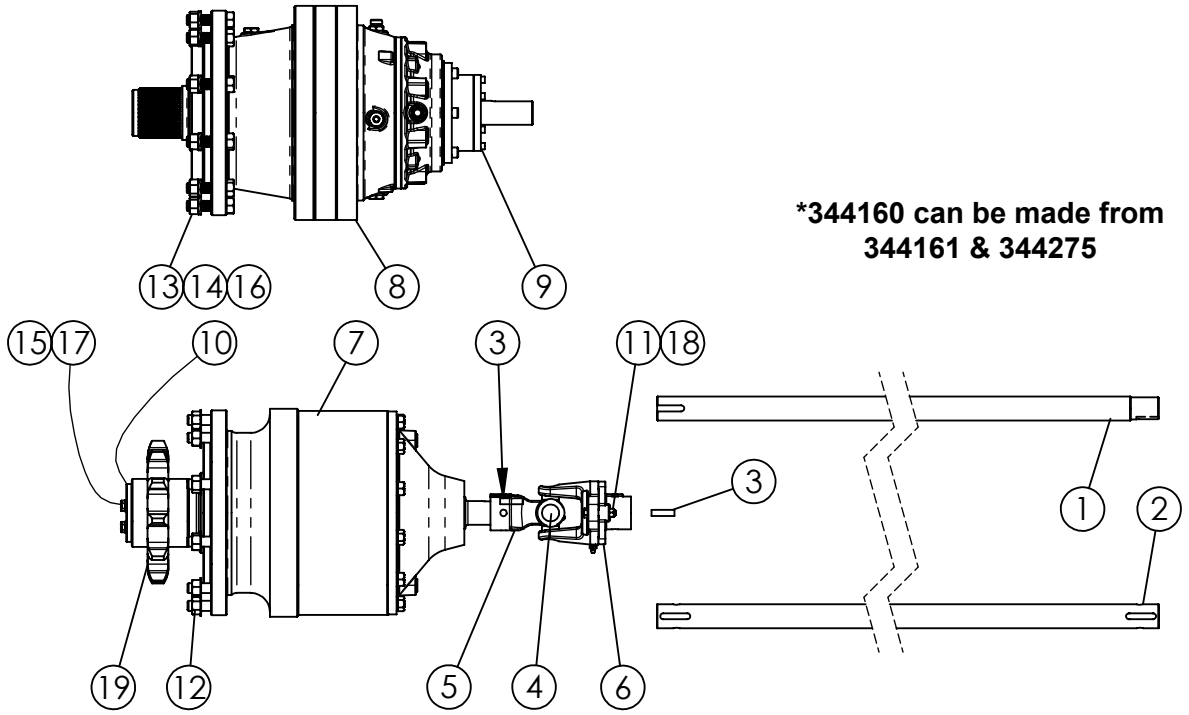

ITEM #	PART #	DESCRIPTION	QTY.
1	187306	TRUCK DRIVELINE x 68"	1
2	189740	STATIONARY & TRAILER DRIVE LINE- 68"	1
3	188043	3/8" SQ. X 1 7/16" KEY	2
4	338441	CROSS KIT 2300	1
5	338456	YOKE W2300 1-1/2" RB	1
6	338456	YOKE - 1-1/2" W2300	1
7	344169	GEARBOX, AUBURN E2488-000-03	1
8	344160*	GEARBOX, BREVINI**, Includes Input**	1
9	344275	SHAFT, UNIVERSAL INPUT SU-2 (BREVINI)	1
10	192653	SHAFT COVER RDF090	1
11	400008	HEX NUT M8 x 1.25 TOP LOCK 8.8	1
12	400129	FLANGE NUT, 5/8"-18 SERRATED	10
13	400210	HEX NUT 5/8"-11 #5 PLTD	10
14	402010	SPRING LOCK WASHER 5/8" PLTD	10
15	402506	FLAT WASHER 3/8" SAE PLTD	3
16	405756	HHCS, 5/8"-11 x 2-1/2" #5 PLTD	10
17	406053	HHCS 3/8"-24 x 1" #5 PLTD	3
18	407814	HHCS 8M x 1.25 x 45MM CLS 8.8	1
19	872586	SPROCKET 180C11 3" 36T SPLINED BORE	1

920-18 DRIVE CHAIN & TIGHTENER SETUP

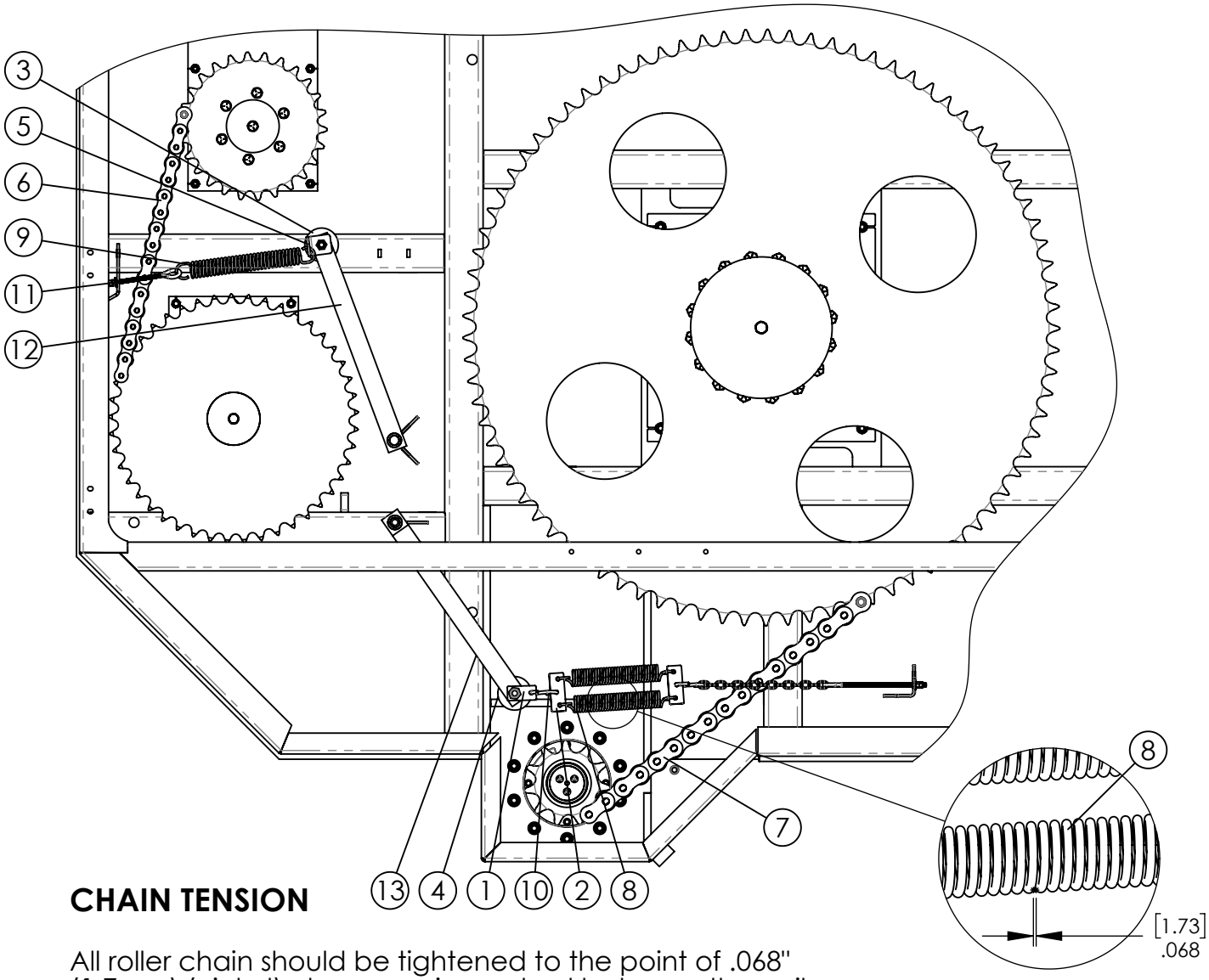

CHAIN TENSION

All roller chain should be tightened to the point of .068" (1.7mm) (nickel) clearance is reached between the coils of the 1-3/4" idler tension springs.

ITEM#	PART#	DESCRIPTION	QTY.
1	181198	PULL TAB 3/4"	1
2	185290	SPRING PULL BAR	2
3	185582	IDLER BLOCK #100 x 2 7/8"	1
4	189472	180 IDLER BLOCK	1
5	190836	FORMED IDLER ANGLE	1
6	321471	ROLLER CHAIN #140 x 71 PITCH COMPLETE	1
7	321802	ROLLER CHAIN #180 x 101 PITCH COMPLETE	1
8	410012	PULL SPRING 1-3/4" x 7"	2
9	410012	SPRING PULL 1 3/4" x 7 x .218	1
10	411805	S - HOOK 5/16"	2
11	410851	EYE BOLT 3/8" X 6"	1
12	872252	IDLER ARM 5/8"BORE, 21 3/4"	1
13	872402	IDLER ARM 3/4" BORE, 21-3/4"	1

920-18 GREASE LINE LUBRICATION

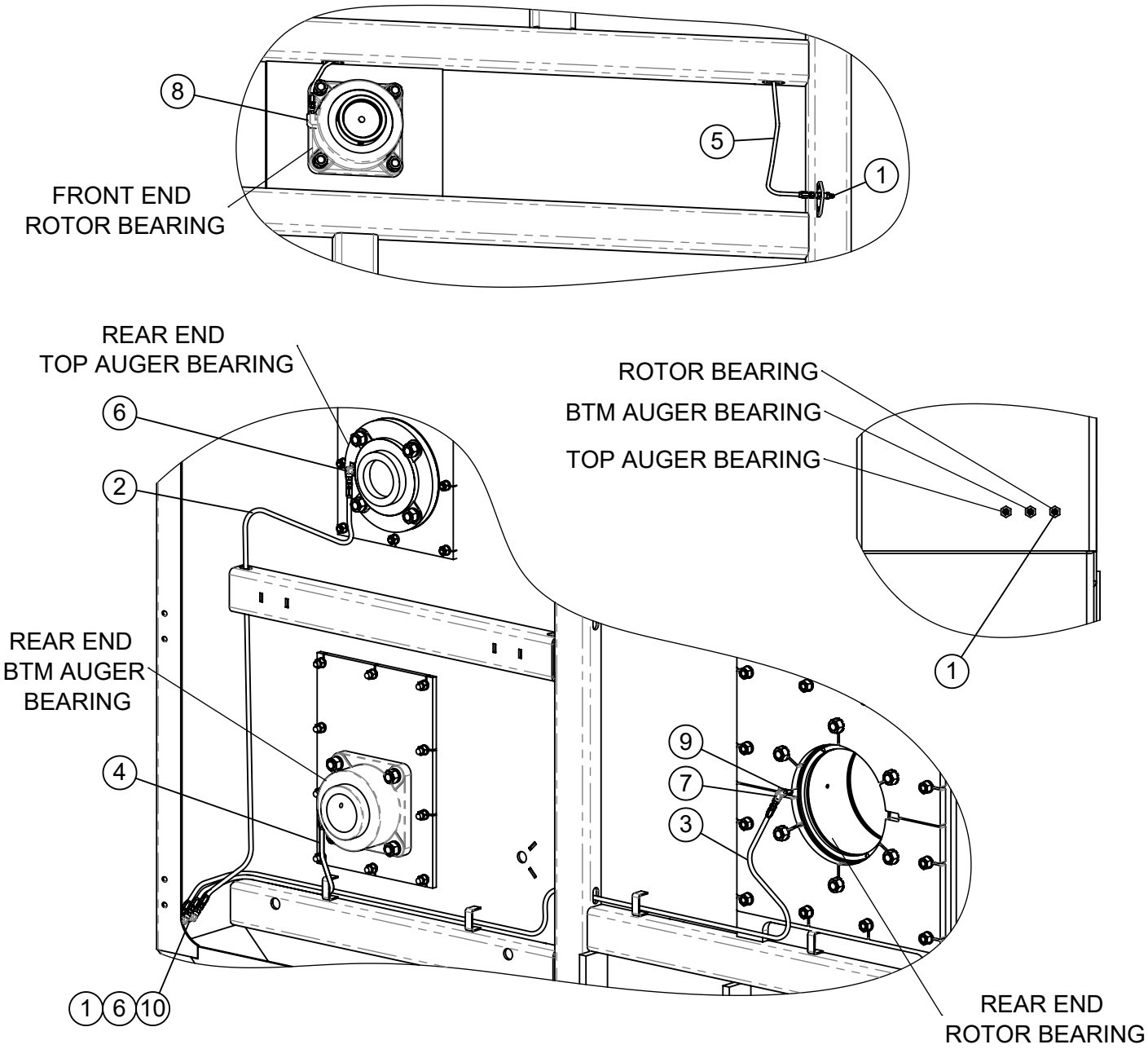

ITEM #	PART #	DESCRIPTION	QTY.
1	310750	FPT GREASE ZERK PLTD 1/8	3
2	367522	Grease Line, (Filled) 55"Lg	1
3	367523	Grease Line, (Filled) 88"Lg	1
4	367524	Grease Line, (Filled) 23"Lg	1
5	367527	Grease Line, (Filled) 61" Lg	1
6	368000	PIPE ELBOW, 90° STREET 1/8"MP x 1/8"FP	5
7	368003	ELBOW 90 1/8FPx1/8FP	1
8	368324	ELBOW, STREET, 1/4"MP x 1/8"FP (STEEL)	1
9	368731	NIPPLE HEX 1/8MPx1/8MP	1
10	402506	FLAT WASHER 3/8" SAE PLTD	3

This Page intentionally left blank.

920-18 OIL COOLER (OPTIONAL)

Table of Contents

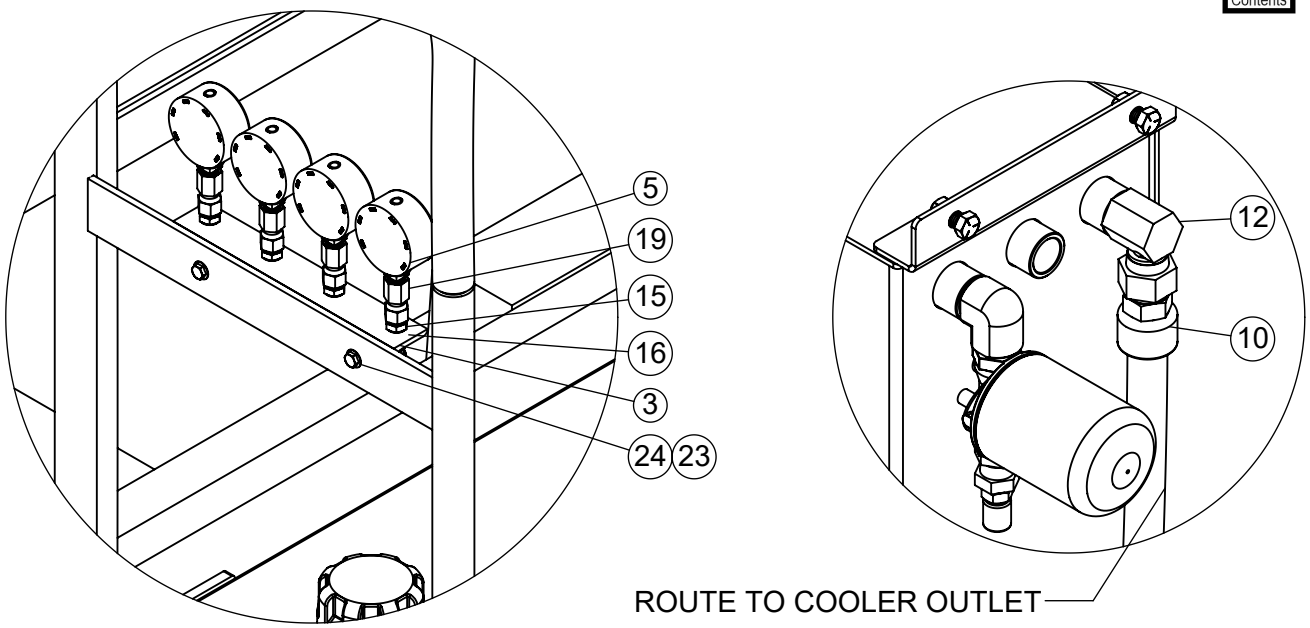

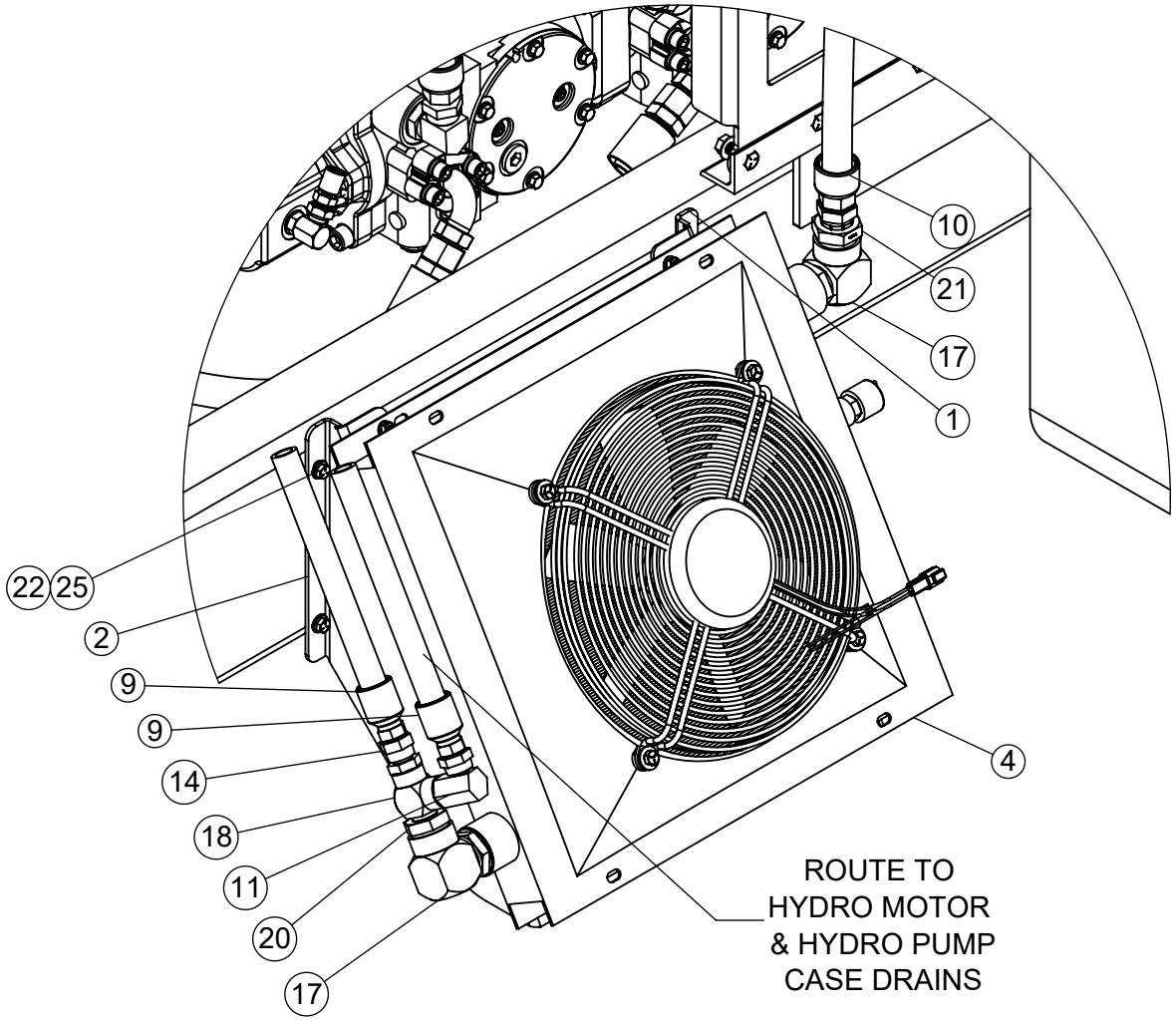

920-18 OIL COOLER (OPTIONAL)

PRESSURE PORTS ON HYDROSTAT PUMPS AND MOTORS ARE M1 & M2
PRESSURE SET FROM FACTORY AT 6,090 PSI

CHARGE PRESSURE PORT ON HYDROSTAT PUMPS AND MOTORS ARE M3
CHARGE PRESSURE SET FROM FACTORY AT 350 PSI

ITEM#	PART#	DESCRIPTION	QTY.
1	190995	COOLER MOUNT BRACKET - RH DCS30	1
2	190996	COOLER MOUNT BRACKET - LH DCS30	1
3	190999	GAUGE MOUNT ANGLE 9-3/4" LGT	1
4	362586	HEAT EXCHANGER W/ELECTRIC FAN	1
5	362806	PRESSURE GAGE, 0-6000 - 1/4 MP STEM	4
6	366033	3/4" HYD HOSE - PUMP CASE DRAIN TO COOLER	1
7	366033	3/4" HYD HOSE - MOTOR CASE DRAIN TO COOLER	1
8	366040	1" HYD HOSE - COOLER TO RESERVOIR	1
9	367104	HOSE STEM, 3/4" x 3/4" MP 12G-12MP MEGA	2
10	367128	HOSE STEM, 1" x 1" MP 16G-16MP MEGA	2
11	368042	ELBOW SWIVEL 3/4" MP x 3/4" FP 90°	1
12	368053	ELBOW SWIVEL, 1" MP x 1" FP 90º	1
13	368195	STRAIGHT ADAPTER 9/16" MOR x 11/16" ORFS	4
14	368117	STRAIGHT SWIVEL, 3/4" MP x 3/4" FPS	1
15	368336	STRAIGHT ADAPTER, 9/16 JIC BULKHEAD	4
16	368337	BULKHEAD NUT, 9/16" JIC	4
17	368420	ELBOW, 1-5/8" MOR x 1-1/4" FP 90º	2
18	368616	STREET TEE 3/4"MP x 3/4"FP x 3/4"FP	1
19	367045	HOSE COUPLER, 1/4" x 9/16" FJ90	4
20	368686	HEX REDUCER 1-1/4" MP x 3/4" FP	1
21	368723	STRAIGHT SWIVEL 1-1/4" MP x 1" FP	1
22	400107	HEX NUT, 3/8"-16 SERRATED FLANGE #5	8
23	400113	HEX NUT, 1/4"-20 SERRATED FLANGE #5	2
24	407875	HHCS 1/4" -20 x 1" SERRATED #5 PLTD	2
25	407904	HHCS 3/8"-16 x 1-1/4" SERRATED #5 PLTD	8

920-18 SHELL REPAIR PARTS

Table of Contents

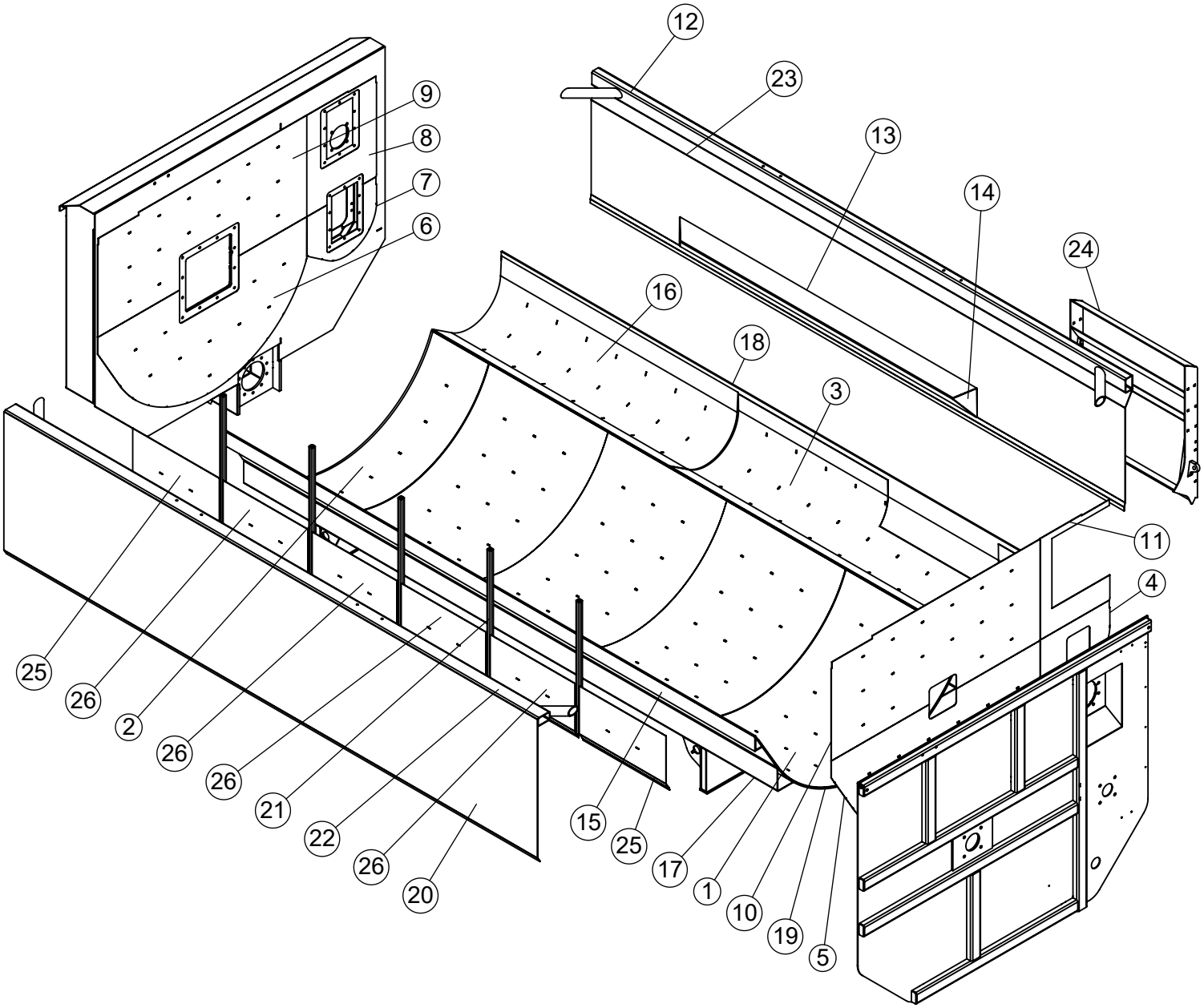

980586 - 10-ga SS Liner Kit Tub and Auger Bottoms
980724 - 12-ga SS Liner Kit with Half End Liners
980725 - 12-ga SS Liner Kit with Full End Liners
980726 - 10-ga SS Liner Kit with Half End Liners
980727 - 10-ga SS Liner Kit with Full End Liners
980760 - 10-ga SS Liner Kit - 20" High Rotor Side Sheet

920-18 SHELL REPAIR PARTS

ITEM#	PART#	DESCRIPTION	QTY.
1	186049-C	920 TUB LINER 48"x109-15/16" 10GA	4
	186049-E	920 TUB LINER 48"x109-15/16" 7GA MS	
2	186057-C	920 TUB LINER 22-1/2"x109-15/16" 10GA	1
	186057-E	920 TUB LINER 22-1/2"x109-15/16" 7GA MS	
3	186058-C	920 AUG LINER 43"x119-5/8" 10GA	1
	186058-E	920 AUG LINER 43"x119-5/8" 7GA MS	
4	186215-C	LINER, 920 AUGER FRNT END 10GA SS	1
	186215-D	LINER, 920 AUGER FRNT END 7GA MS	
5	186216-C	LINER, 920 TUB FRNT END 10GA	1
	186216-D	LINER, 920 TUB FRNT END 7GA MS	
6	186217-C	LINER, 920 TUB REAR END 10GA	1
	186217-D	LINER, 920 TUB REAR END 7GA MS	
7	186218-C	LINER, 920 AUGER RR END 10GA	1
	186218-D	LINER, 920 AUGER RR END 7GA MS	
8	186219-C	LINER,920 AUGER REAR UPPR END 10GA	1
	186219-D	LINER,920 AUGER REAR UPPR END 7GA MS	
9	186220-C	LINER, 920 TUB REAR UPPER END 10GA	1
	186220-D	LINER, 920 TUB REAR UPPER END 7GA MS	
10	186221-C	LINER, 920 TUB FRONT UPPER END 10 GA	1
	186221-D	LINER, 920 TUB FRONT UPPER END 7 GA MS	
11	186222-C	LINER, 920 AUGER FRNT UPPR END 10GA	1
	186222-D	LINER, 920 AUGER FRNT UPPR END 7GA MS	
12	189450	920 SIDE TUBE	1
13	189455	AUGER ANGLE - 14" x 119 7/8"	1
14	189456	ANGLE END CAP 6 15/16" x 10"	2
15	189457	ROTOR SIDE ANGLE 5 x 3 x 3/8 x 215-7/8	1
16	189676-C	LINER, 620 10GA SS AUGER	1
	189676-D	LINER, 620 7GA MS AUGER	
17	189787	900 TUB ANGLE 215 15/16"	2
18	189788	900 - 3/8" AUGER BOTTOM 215 15/16"	1
19	189790	900 3/8" TUB BOTTOM 215 15/16"	1
20	190823	920 ROTOR SIDE SHEET	1
21	190825	920 ROTOR SIDE SUPPORT TUBE	5
22	190830	920 ROTOR SIDE TUBE	1
23	192045	920 AUGER SIDE SHEET 215 13/16"	1
24	873135	620 SLIDE DOOR FRAME (NEW)	1
25	186336-C	920 HALF RIGHT SIDE LINER 10-GA SS	4
26	186338-C	920 HALF RIGHT SIDE LINER 10-GA SS - FRT	2

TRUCK CAB SCALE INDICATOR FRAME PARTS

Table of Contents

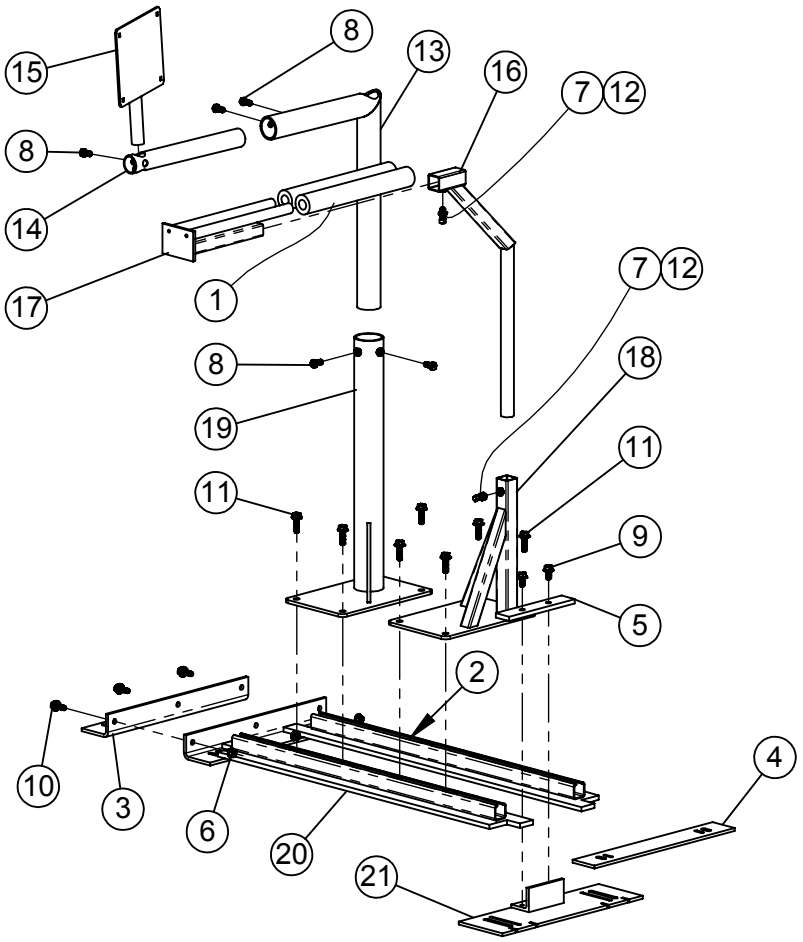

ITEM #	PART #	DESCRIPTION	QTY.
1	185930	ARM REST PAD 12"	2
2	192578	ARM REST SLIDE BAR	4
3	192585	BRACKET, PASSENGER CAB SEAT	1
4	192587	SPACER, TRUCK CAB DRIVER'S SEAT	1
5	192593	PLATE, TRUCK CAB MOUNT SETTING	1
6	400107	HEX NUT, 3/8"-16 SERRATED FLANGE #5	3
7	400606	HEX JAM NUT 3/8-16"	2
8	405652	HHCS 3/8"-16 x 3/4" #5 PLTD	5
9	407900	HHCS 3/8"-16 x 3/4" SERRATED #5 PLTD	2
10	407901	HHCS 3/8"-16 X 1" SERRATED #5 PLTD	3
11	407904	HHCS 3/8"-16 x 1-1/4" SERRATED #5 PLTD	8
12	409543	SQ HD SET SCREW CUP, 3/8" x 1"	2
13	871095	TRUCK SCALE INDICATOR MOUNT W.A.	1
14	871103	INDICATOR EXTENSION TUBE W.A.	1
15	871111	TRUCK SCALE INDICATOR SWIVEL W.A.	1
16	872263	ARM REST GOOSE NECK W.A.	1
17	872264	ARM REST W.A.	1
18	873389	SHORT ARM REST STAND W.A.	1
19	873390	SHORT TRUCK SCALE IND. BASE W.A.	1
20	873391	BASE, TRUCK CAB MOUNT WA	1
21	873394	BRACKET, DRIVER'S SEAT WA	1

TRUCK CAB SCALE INDICATOR FRAME PARTS

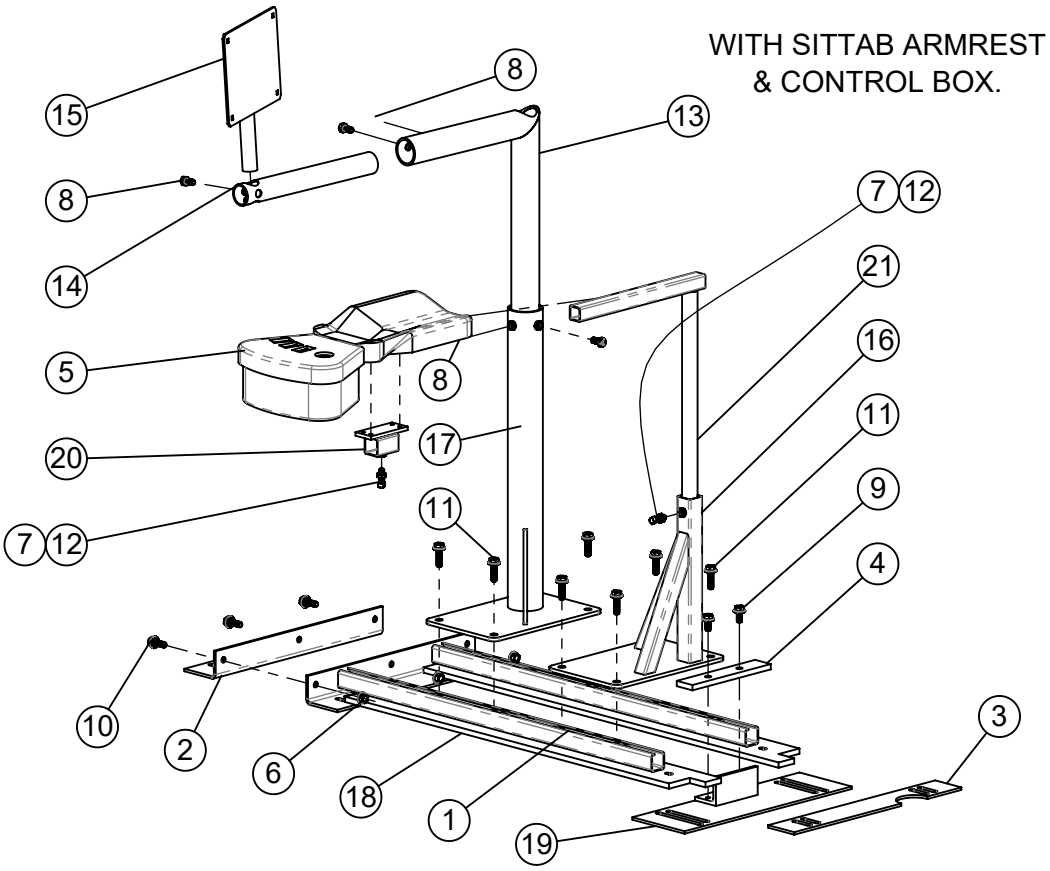

ITEM #	PART #	DESCRIPTION	QTY.
1	192578	ARM REST SLIDE BAR	4
2	192585	BRACKET, PASSENGER CAB SEAT	1
3	192587	SPACER, TRUCK CAB DRIVER'S SEAT	1
4	192593	PLATE, TRUCK CAB MOUNT SETTING	1
5	370351	ARMREST AND CONTROL BOX	1
6	400107	HEX NUT, 3/8"-16 SERRATED FLANGE #5	3
7	400606	HEX JAM NUT 3/8-16"	2
8	405652	HHCS 3/8"-16 x 3/4" #5 PLTD	5
9	407900	HHCS 3/8"-16 x 3/4" SERRATED #5 PLTD	2
10	407901	HHCS 3/8"-16 X 1" SERRATED #5 PLTD	3
11	407904	HHCS 3/8"-16 x 1-1/4" SERRATED #5 PLTD	8
12	409543	SQ HD SET SCREW CUP, 3/8" x 1"	2
13	871095	TRUCK SCALE INDICATOR MOUNT W.A.	1
14	871103	INDICATOR EXTENSION TUBE W.A.	1
15	871111	TRUCK SCALE INDICATOR SWIVEL W.A.	1
16	873389	SHORT ARM REST STAND W.A.	1
17	873390	SHORT TRUCK SCALE IND. BASE W.A.	1
18	873391	BASE, TRUCK CAB MOUNT WA	1
19	873394	BRACKET, DRIVER'S SEAT WA	1
20	873453	ARM REST MOUNT WA	1
21	873454	ARM REST GOOSE NECK W.A. - SITTAB	1

TRUCK FRONT BUMPERS

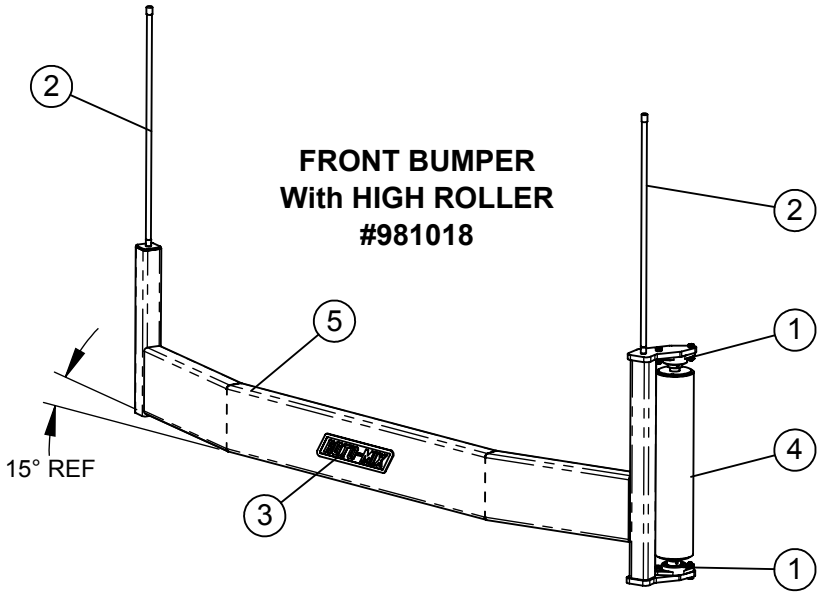

ITEM #	PART #	DESCRIPTION	QTY.
1	340222	BEARING, 1 3/8" VCJT	2
2	370334	MARKER, ORANGE STICK x 2 FT	2
3	440890	DECAL - ROTO-MIX - 15-11/16" x 3 11/16"	1
4	872434	ROLLER, FT BUMPER, 5" DIA.	1
5	872439	BUMPER FRT W/HIGH ROLLER WA.	1

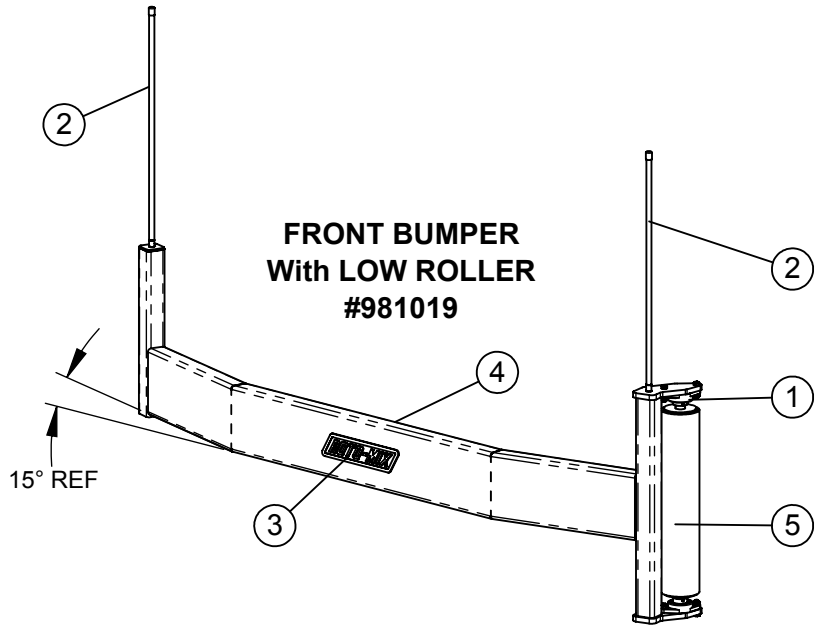

ITEM #	PART #	DESCRIPTION	QTY.
1	340222	BEARING, 1 3/8" VCJT	2
2	370334	MARKER, ORANGE STICK x 2 FT	2
3	440890	DECAL - ROTO-MIX - 15-11/16" x 3 11/16"	1
4	872430	BUMPER W/ ROLLER RR PTO WA	1
5	872434	ROLLER, FT BUMPER, 5" DIA.	1

TRUCK FRONT BUMPERS

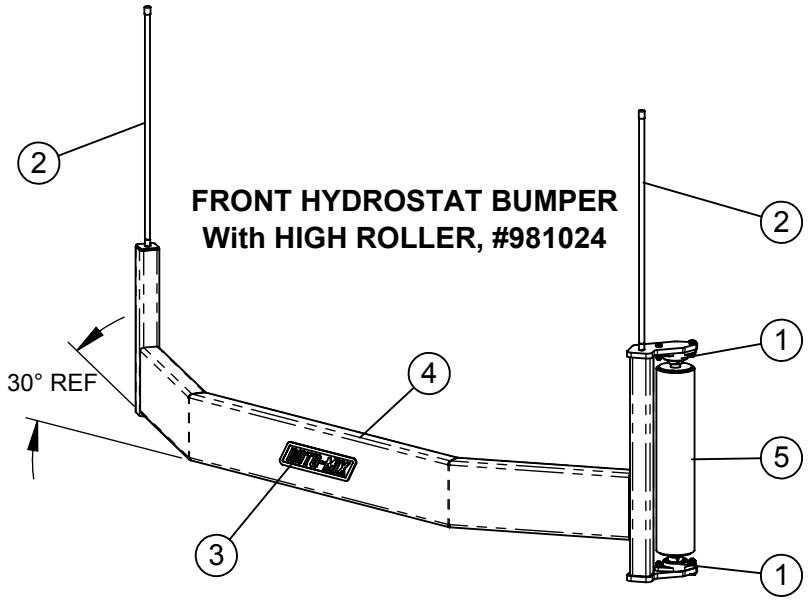

ITEM #	PART #	DESCRIPTION	QTY.
1	340222	BEARING, 1 3/8" VCJT	2
2	370334	MARKER, ORANGE STICK x 2 FT	2
3	440890	DECAL - ROTO-MIX - 15-11/16" x 3 11/16"	1
4	872431	BMPR FRT HYDRO W/HIGH RLLR WA	1
5	872434	ROLLER, FT BUMPER, 5" DIA.	1

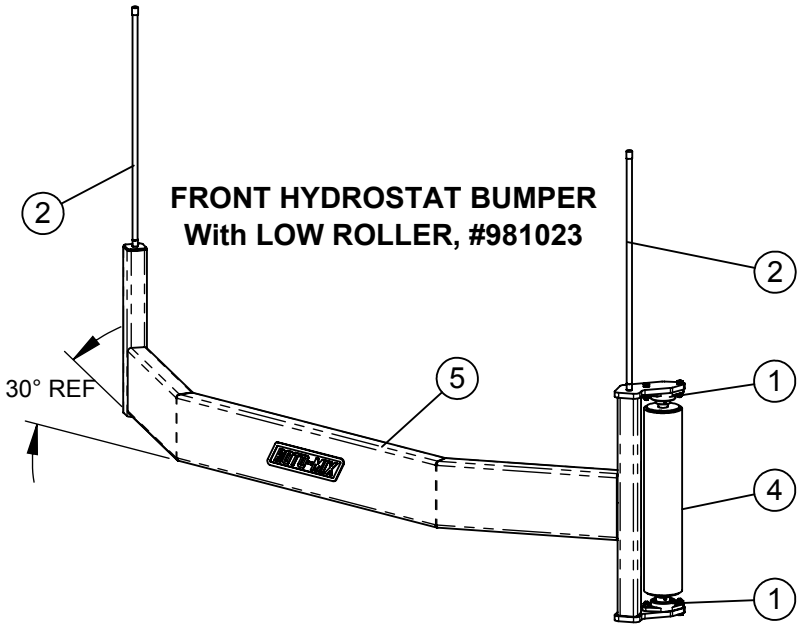

ITEM #	PART #	DESCRIPTION	QTY.
1	340222	BEARING, 1 3/8" VCJT	2
2	370334	MARKER, ORANGE STICK x 2 FT	2
3	440890	DECAL - ROTO-MIX - 15-11/16" x 3 11/16"	1
4	872434	ROLLER, FT BUMPER, 5" DIA.	1
5	872440	BMPR FRT HYDRO W/ ROLLER WA	1

TRUCK FRONT BUMPERS

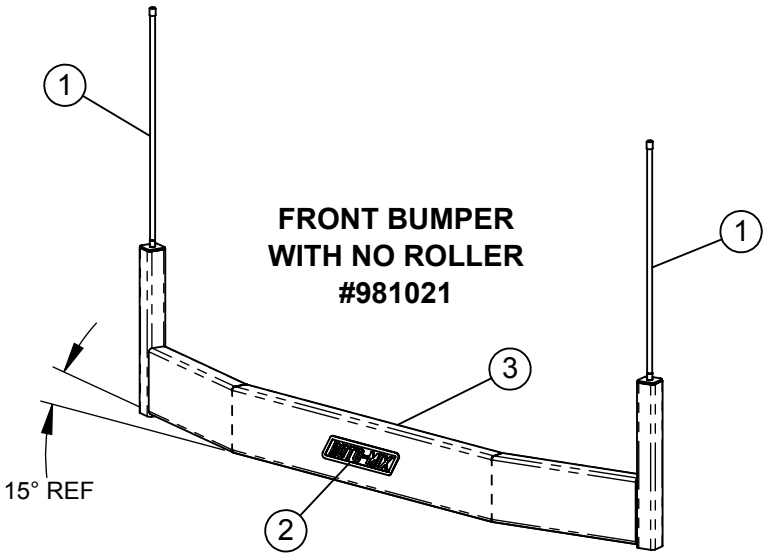

ITEM #	PART #	DESCRIPTION	QTY.
1	370334	MARKER, ORANGE STICK x 2 FT	2
2	440890	DECAL - ROTO-MIX - 15-11/16" x 3 11/16"	1
3	872432	BUMPER, TRK FRT, NO ROLLER	1

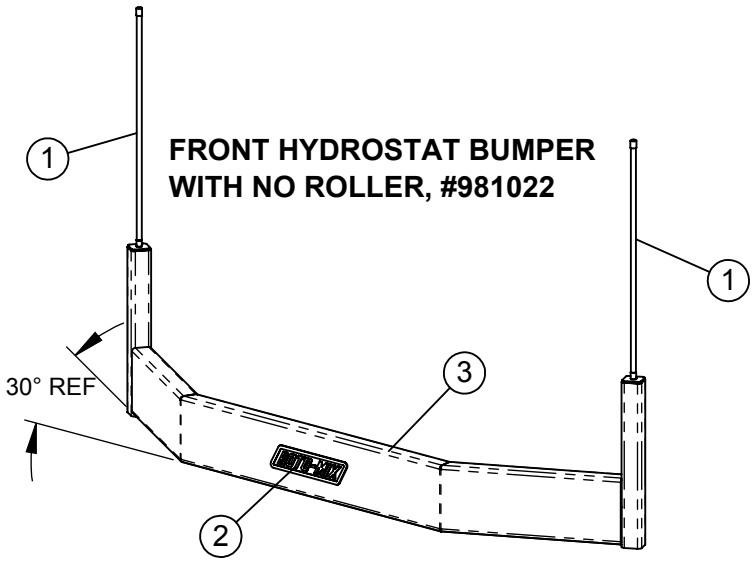

ITEM #	PART #	DESCRIPTION	QTY.
1	370334	MARKER, ORANGE STICK x 2 FT	2
2	440890	DECAL - ROTO-MIX - 15-11/16" x 3 11/16"	1
3	872433	BUMPER, TRK FRT NO ROLLER	1

TRUCK REAR BUMPER, 10", RECT. LIGHT HOLES #780948

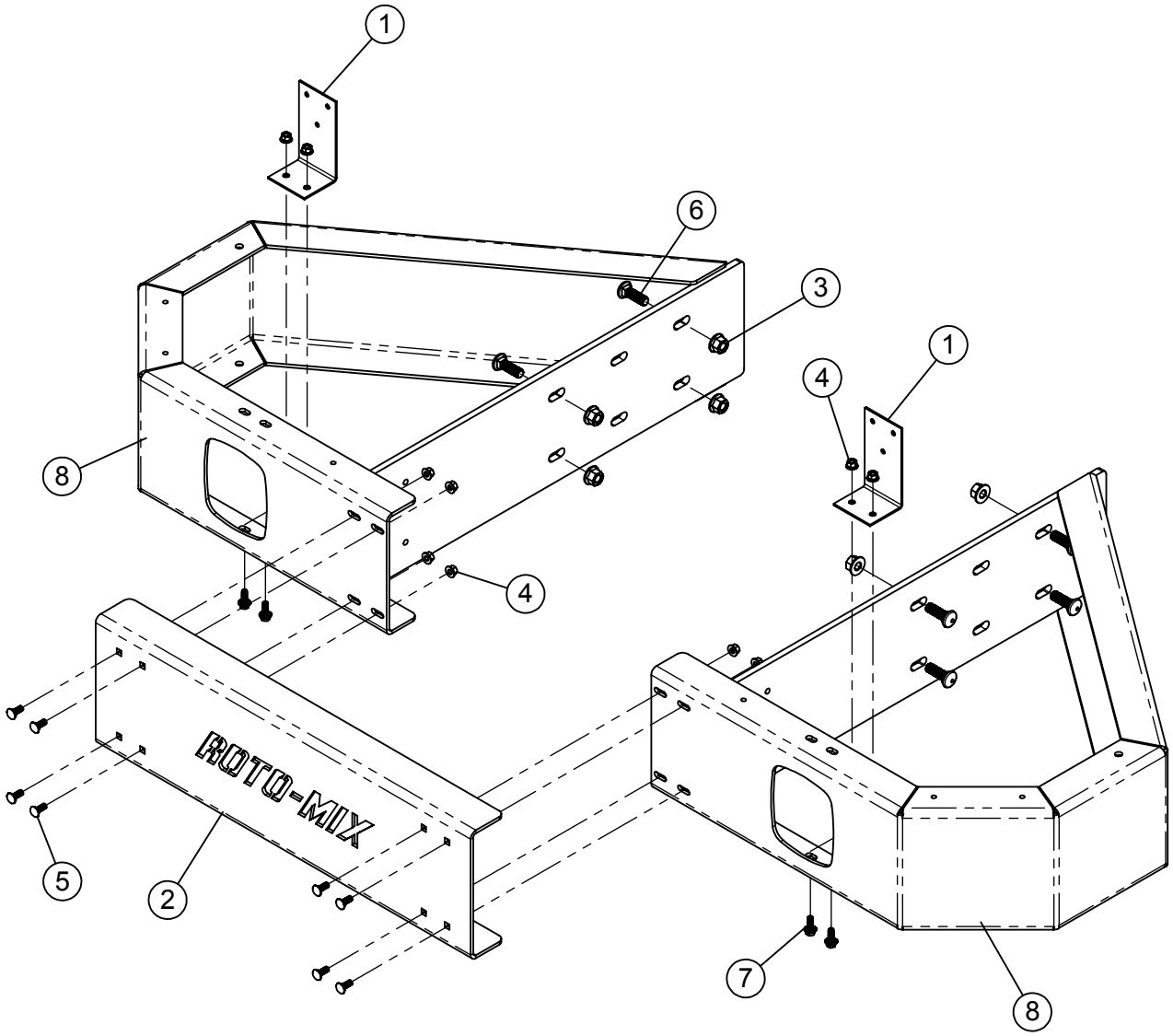

ITEM #	PART #	DESCRIPTION	QTY.
1	185600	TAIL LIGHT BRKT	2
2	192219	PLATE, FLR 10" RR BMPR ROTO-MIX	1
3	400115	FLANGE NUT, 5/8-11	8
4	400107	FLANGE NUT, 3/8-16	12
5	407040	CHCS 3/8"-16 x 1" #5 PLTD	8
6	407121	CHCS 5/8"-11 x 2" #5 PLTD	8
7	407901	HHCS 3/8"-16 X 1" SERRATED #5 PLTD	4
8	873286	BMPR, 10" REAR HALF, RECT. W.A.	2

TRUCK REAR BUMPER, 10", ROUND LIGHT HOLES #780949

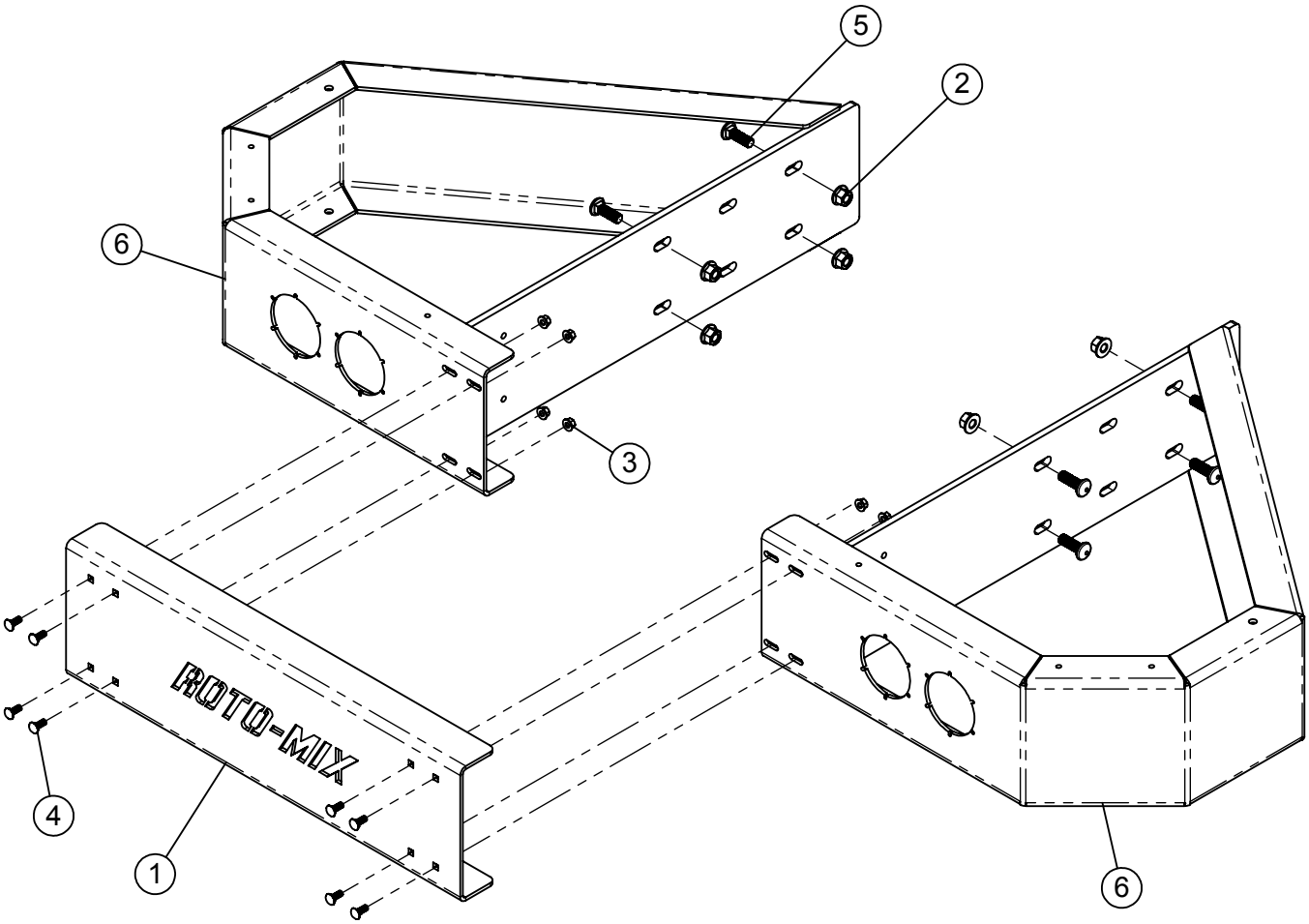

ITEM #	PART #	DESCRIPTION	QTY.
1	192219	PLATE, FLR 10" RR BMPR ROTO-MIX	1
2	400115	FLANGE NUT, 5/8-11	8
3	400107	FLANGE NUT, 3/8-16	8
4	407040	CHCS 3/8"-16 x 1" #5 PLTD	8
5	407121	CHCS 5/8"-11 x 2" #5 PLTD	8
6	873287	BMPR, 10" RR HALF RND HOLES W.A.	2

This Page intentionally left blank.